VC Series

User Manual

Preface

Material verview:

Thank you for choosing VC Series Multifunctional Vector VFD.
This user manual provides the technical specifications, installation and operation instructions, and functional parameters of VC universal inverter products. Please read it carefully before installation, operation, maintenance, or inspection.
In particular, please be sure to read and understand the safety precautions in this manual before using the product, and ensure that the qualifications of the relevant electrical installation and testing personnel meet the provisions of the labor supervision department. The electrical and environmental conditions of the product meet the applicable national standards.
Please make sure that the wiring is correct before powering the product. It is necessary to ensure that the steering of the motor meets the requirements through debugging.
During the installation, use, and maintenance of the product, if you need to inquire about the functions, performance, other technical problems, and safety precautions of the product, please contact the customer service center of the company according to the service hotline in this manual (See the manual cover).
Due to the continuous upgrading of products, the content is subject to change without notice.

How to get user manual & other product introduction:

This user manual does not come with the machine
● Scan the QR code on the VFD, and you can also download the newest user manual.
● Consult our sales staff for full information.
Warranty Statement:
Under normal use, if the product fails or is damaged, our company will provide warranty service during the warranty period (please refer to the product warranty period in the order). After the warranty period, a repair fee will be charged.
If the product is broken under the following circumstances during the warranty period, it will be charged for repair.● Failure to operate the product according to the manual, resulting in product damage.
● Product damage caused by fire, flood, or abnormal voltage.
● Use of this product for abnormal functions, resulting in product damage.
● Product damage caused by exceeding the specified scope of use of the product.
● Secondary damage caused by force majeure (natural disaster, earthquake, lightning strike) factors.
The relevant service fees are calculated according to the unified standard of the manufacturer. If there is a contract, the principle of contract priority is dealt with. For detailed warranty instructions, please refer to Warranty Instructions.

Safety precautions

■ Manual Warning Label Definition

⚠ Danger: Indicates a high probability of death or serious injury if the correct instructions are not followed.

⚠ Warning: If the correct information is not displayed, it may result in moderate or minor injury or equipment damage.

⚠ Note: If the correct prompt is violated, it may result in an error or unsafe use of the device.

⚠ WARNING

◎ If VFD is damaged, flooded or parts are missing, it cannot be installed or operated. Otherwise, equipment damage or personal injury may occur.

◎ Please hold the bottom of the product when installing and moving, and cannot only hold the shell to prevent smashing or breaking the VFD.

◎ VFD should be away from flammable and explosive objects, away from heat sources, and installed on flame retardants such as metals.

◎ When the VFD is installed in an electrical cabinet or other enclosure, install fans or other cooling equipment in the cabinet and set vents to ensure that the ambient temperature is below 40°C, otherwise the inverter may be damaged because the ambient temperature is too high.

◎ Before connecting cables, ensure that the rated voltage and phase number of the inverter are consistent with the input power voltage and phase number. Otherwise, fire or personal injury may occur.

◎ The AC input power can not be connected to the inverter output terminals U, V, W, otherwise the inverter will be damaged and cannot enjoy the warranty service.

◎ Do not test the voltage resistance of the inverter, otherwise it will cause damage to the VFD.

◎ The main loop terminal wiring and control loop wiring of the product should be routed separately or crossed vertically, otherwise the control signal will be interfered with.

◎ The wiring cable of the main loop terminal should use a wire nose with an insulating sleeve.

⚠ DANGER

◎ Wiring must be completed by qualified professional electrical engineers, otherwise it is possible to shock or cause damage to the inverter.

◎ Ensure that the power supply is off before connecting the cable. Otherwise, electric shock or fire may occur.

◎⏚ Ground terminal must be grounded reliably. Otherwise, there is a risk of electrified VFD housing.

◎ Do not touch the main loop terminal. Do not connect the main loop terminal of the VFD to the housing. Otherwise, electric shock may occur.

◎ The connection terminals of the brake resistor are (+) and PB. Do not connect other terminals.

Otherwise, a fire may occur.

◎ The VFD can be powered on after the wiring is completed and the cover plate is added. It is strictly prohibited to remove the cover plate when it is charged, otherwise it may lead to electric shock.

◎ When the VFD is configured with the function of automatic reset after failure or automatic restart after power failure, you must take safety measures in advance to protect the equipment system; otherwise, personnel may be injured.

◎ The "Run/Stop" button may fail due to a function setting. A separate emergency power off switch can be installed in the inverter control system, otherwise it may result in personal injury.

⚠ WARNING

◎ PCB has a CMOS integrated circuit. Do not touch it with your hands. Otherwise, static electricity may damage the PCB.

Unpacking and inspecting

⚠ WARNING

When unpacking the product and product accessories are found to have damage, rust, signs of use and other problems, do not install!

When the product is found inside water, parts missing or parts damaged, do not install!

Please check the packing list carefully. If the packing list does not match the product name, do not install!

⚠ NOTE

Before unpacking, please check whether the outer package of the equipment is intact, whether it is damaged, soaked, damp, deformed, etc.

Please open the package in order of hierarchy, do not hit hard!

When unpacking, please check the surface of the equipment and accessories for damage, rust, bruise and other conditions.

After unpacking, please check the packing list carefully to check whether the quantity and information of equipment and accessories are complete.

Storage and transportation

⚠ WARNING

Be sure to use professional lifting equipment and handle large or heavy products by qualified professionals. Otherwise, there is a risk of injury or product damage!

Before vertical lifting the product, please confirm that the front cover, terminal block and other product components have been fixed with screws, otherwise the parts fall off may cause injury or product damage danger!

When the product is lifted by the lifting equipment, it is forbidden to stand or stay under the product.

When lifting the product with wire rope, please lift it at a steady and uniform speed, do not make the product subject to vibration or impact, do not make the product turn over, and do not make it

The product is suspended for a long time, otherwise there is a risk of injury or product damage!

⚠ NOTE

When handling the product, please be sure to carry it gently and pay attention to the object under your feet at any time to prevent tripping or falling, otherwise there is the risk of injury or product damage!

When handling the product by hand, be sure to grasp the product shell to avoid the product parts falling, otherwise there is the risk of injury!

Please store and transport in strict accordance with the required storage and transportation conditions of the product, otherwise there is the risk of product damage.

Avoid storage and transportation in places such as water splashing, direct sunlight, strong electric field, strong magnetic field, and strong vibration.

Avoid product storage time of more than 3 months, storage time is too long, please carry out more stringent protection and necessary inspection.

Please strictly package the product before vehicle transportation, long distance transportation must use a closed box.

It is strictly prohibited to transport this product together with equipment or articles that may affect or damage this product.

Installation

⚠ DANGER

Only professionals who have been trained in electrical equipment and have electrical knowledge can operate. Non-professional personnel are strictly prohibited!

⚠ WARNING

Please read the product manual and safety precautions carefully before installation!

Do not install this product in places with strong electric field or electromagnetic wave interference!

Before installation, ensure that the mechanical strength of the installation position is sufficient to support the weight of the equipment, otherwise it will cause mechanical hazards.

Do not wear loose clothes or accessories during installation, otherwise there may be a risk of electric shock!

When the product is installed in a closed environment (such as a cabinet or a chassis), please use a cooling device (such as a cooling fan or cooling air conditioner) to cool fully to meet the installation environment requirements, otherwise the product may overheat or fire.

No modification of this product!

It is strictly forbidden to screw the fixing bolts and red marked bolts of the parts and components of the product!

When this product is installed in the cabinet or terminal equipment, the cabinet or terminal equipment shall be provided with corresponding fire protection enclosures, electrical protection enclosures and mechanical protection enclosures, and the protection level shall comply with relevant IEC standards and local laws and regulations.

When it is necessary to install transformers and other equipment with strong electromagnetic interference, please install shielding protection devices to avoid misoperation of this product!

Please install the product on metal and other flame-retardant objects, do not make flammable substances contact the product or attach flammable substances to the product, otherwise there will be a risk of fire.

⚠ NOTE

During installation, cover the top of the product with cloth or paper to prevent foreign bodies such as metal shavings, oil, and water from entering the inside of the product during drilling and causing product failure. After the operation, please remove the cover to avoid blocking the ventilation hole and affecting heat dissipation, resulting in abnormal heating of the product.

Resonance may occur when a machine operating at a constant speed is operated with variable

speeds. At this time, install anti-vibration under the motor frame.
Rubber or use vibration suppression function, can effectively reduce the resonance.

Wiring

⚠ DANGER

Non-professional personnel are strictly prohibited from equipment installation, wiring, maintenance, inspection or parts replacement!

Before wiring, please cut off the power to all devices. After the power supply is turned off, the internal capacitor has residual voltage. Wait at least the time specified in the warning label before connecting cables. Measure the DC voltage of the main circuit and confirm that it is under the safe voltage, otherwise there is the risk of electric shock.

Please disconnect the power supply for wiring operations, remove the product cover or touch the circuit board, otherwise there will be a risk of electric shock.

Ensure that devices and products are properly grounded; otherwise, electric shocks may occur.

⚠ WARNING

Do not connect the input power to the output of the device or product, otherwise it will cause damage to the device and even cause a fire.

When the drive device is connected to the motor, be sure to ensure that the phase sequence of the product and the motor terminal is accurate and consistent to avoid the reverse rotation of the motor.

The cables used in wiring must meet the requirements of the corresponding wire diameter and shielding, and the shielding layer of the shielded cable needs to be reliably grounded on a single end!

Tighten the terminal screws according to the tightening torque specified in the manual. Insufficient or too large tightening torque may cause overheating or damage to the connection, which may cause fire hazards.

After the cable connection is complete, ensure that all cables are correctly connected, and there are no dropped screws, gaskets, or bare cables in the product Risk of electric shock or damage to the product.

⚠ NOTE

Please follow the steps specified in ESD preventive measures and wear an ESD bracelet for wiring and other operations to avoid damaging the circuit inside the device or product.

When wiring the control loop, please use double-stranded shield wire to connect the shield layer to the grounding terminal of the product for grounding, otherwise it will cause abnormal operation of the product.

Power-on

⚠ DANGER

Before powering on, please confirm that the product is installed well, the wiring is firm, and the motor device is allowed to restart.

Before powering on, please confirm that the power supply meets the product requirements to avoid product damage or fire!

It is strictly prohibited to open the door of the product cabinet or the product protection cover plate, touch any terminal of the product, disassemble any device or component of the product in the energized state, otherwise there is a risk of electric shock!

⚠ WARNING

After the wiring operation and parameter setting is completed, please conduct a trial run of the machine to confirm that the machine can operate safely, otherwise it may lead to injuries or equipment damage.

Before power on, please ensure that the rated voltage of the product is consistent with the power supply voltage. If the power supply voltage is used incorrectly, there is a risk of fire.

Before powering on the machine, ensure that no one is around the machine, motor, or machine, as this may result in injury or death.

Runtime

⚠ DANGER

Non-professional personnel are strictly prohibited from running the product, otherwise it will lead to injury or death!

It is strictly forbidden to touch any terminal of the equipment, disassemble any device or component of the equipment and product in the running state, otherwise there is a risk of electric shock!

⚠ WARNING

Do not touch the device housing, fan or resistor to test the temperature, otherwise it may cause burns!

During operation, avoid other items or metal objects falling into the equipment, otherwise it may cause fire or product damage!

Maintenance time

⚠ DANGER

Non-professional personnel are strictly prohibited from equipment installation, wiring, maintenance, inspection or parts replacement!

It is strictly prohibited to carry out equipment maintenance in the energized state, otherwise there is the risk of electric shock!

After cutting off the power supply of all devices, wait at least the time specified on the warning label of the product before performing equipment maintenance and other operations.

When using a PM motor, even if the power supply of the product is turned off, an induced voltage is generated on the motor terminals during the motor rotation. Do not touch the terminal of the motor, otherwise there may be a risk of electric shock.

⚠ WARNING

Please check and maintain the equipment and products daily and regularly according to the equipment maintenance and maintenance requirements, and make maintenance records.

Maintain

⚠ DANGER

Non-professional personnel are strictly prohibited from equipment installation, wiring, maintenance, inspection or parts replacement!

It is strictly prohibited to carry out equipment maintenance in the energized state, otherwise there is the risk of electric shock!

After powering off all devices, wait at least the time specified in the warning label before checking or maintaining the devices.

⚠ WARNING

Please repair the equipment according to the product warranty agreement.

When the fuse is blown, the circuit breaker is tripped or the leakage circuit breaker (ELCB) is tripped, please wait at least the time specified on the warning label on the product before switching on the power or operating the machine, otherwise it may cause casualties and equipment damage.

When the equipment fails or is damaged, it is necessary for professionals to troubleshoot and repair the equipment and products according to the maintenance guidance, and make maintenance records.

Please follow the replacement guide of the product wearing parts.

Do not continue to use the machine that has been damaged, otherwise it may cause casualties or greater damage to the product.

After replacing the device, check cable connections and set parameters again.

Scrap

⚠WARINING

Please scrap equipment and products in accordance with relevant national regulations and standards to avoid property losses or casualties!

Waste equipment and products should be recycled in accordance with industrial waste treatment standards to avoid environmental pollution.

Safety signs: To ensure safe operation, observe the safety labels affixed to the device. Do not damage or peel off the safety labels. The safety identifier is described as follows:

Safety Sign	Contents Note
	Please read the safety manuals and instructions carefully before using the product, otherwise there will be casualties or product damage risk! Do not touch the terminal part or remove the cover plate within 10 minutes after the power is turned off. Otherwise, an electric shock may occur! !

Content

Chapter 1 Product information 1

1.1 Technical specifications 1
1.2 Product nameplate 4
1.3 Model coding 4
1.4 Product model 5
1.5 System connection diagram 6

Chapter 2 Panel display and operation 8

2.1 Display interface introduction 8
2.2 Quick on-board debugging operation 9
2.3 Indicator and button function 10

Chapter 3 Component introduction 11

3.1 Product component 11
3.2 Use in special scenarios 14
3.3 Structural design specifications 15

Chapter 4 The dimensions and terminals 16

4.1 Single-phase 220V machine structure dimensions 16
(Unit: mm) 16
4.2 There-phase 380V machine structure dimensions 17
(Unit: mm) 17
4.3 Keyboard structure size (Unit: mm) 22
4.4 Main loop terminals and functions 23
4.5 Control loop terminals and functions 24

Chapter 5 Installation and wiring 29

5.1 Installation preparation 29
5.2 Installation of mechanisms 32
5.3 Select parts installation instructions 34
5.4 Common control loop wiring instructions 35

Chapter 6 Function parameter table 37

6.1 Basic parameter set 38
6.2 Fault record parameter group 87
6.3 Display parameter group 88
6.4 A0 Application parameter group 90

Chapter 7 Communication protocol 91

7.1 Protocol content 91

7.2 Application mode 91
7.3 Bus structure 91
7.4 Protocol specification 91
7.5 Communication frame specification 92
7.6 Register address 95
7.7 EEPROM address specifications 101

Chapter 8 Fault diagnosis and countermeasures 102

8.1 Failure code specification 102
8.2 Fault diagnosis and countermeasures 106

Chapter 9 Function Code 108

F0 group basic function group 108
F1 group start stop control 118
F2 group motor parameters 124
F3 vector control parameters 128
F4 group V/F control parameters 136
F5 Input terminals 144
F6 group output terminals 154
F7 group keyboard with display 165
F8 group accessibility 170
F9 group process control PID function 177
FA group failure and protection 184
FB group swing frequency, fixed length and counting 189
FC group communication parameters 191
FD group multi-speed function and simple PLC function 193
FE group user password 198
A0 displays the parameter group 198

Chapter 10 Daily care and maintenance 199

10.1 Routine check items 199
10.2 Check list 200
10.3 Replacement of wearing parts 202

Chapter 11 Selection guidance 203

11.1 Power terminal cable diameter recommended 203
11.2 Grounding wire selection 205
11.3 Reactor selection recommendation 206
11.4 Recommended selection of external brake resistance 207

Warranty description 208

1.1 Standard warranty period 208

1.2 Warranty coverage 208
1.3 Out of warranty 208
1.4 Service after warranty expires 208

Chapter 1 Product information

1.1 Technical specifications

Item		Specifications	
Control characteristic	Control mode	V/F	SVC
	Starting torque	1Hz/100% nominal torque	0.5Hz/150% nominal torque
	Speed range	1: 50	1: 100
	Steady state	≤1% Rated synchronous speed	≤0.5% Rated synchronous speed
	Carrier frequency	0.6kHz-16kHz	
	Overload capacity	150% rated current 60s; 180% rated current 2s	
	Torque boost	Alto-torque lift; Manual torque lift 0.1% to 30.0%	
I/O	Input voltage range	single phase 200V-240V, three phase380V-480V	
	Allowable fluctuation range of input voltage	-15%-10% (Theoretical allowable value: single phase AC 170V-264V three-phase AC 323V-528V) Note: The range is a theoretical value, and when it approaches the maximum/minimum voltage, due to factors such as stability in practical application, it is prone to alarm conditions. It is recommended to pay attention to the input voltage selection.	
	Input frequency range	50/60Hz; fluctuation range: ±5%	
	Output voltage range	0-input voltage, fluctuation range: 5%	
	Output frequency range	SVC: 0-500Hz, V/F: 0-1000Hz, fluctuation range: ±5% of Max frequency	
Run control	Run command channel	3 kinds of channels: Operation panel setting, Control terminal setting, and Serial communication port given; These can change in different ways.	
	Frequency source	Digital setting, panel pulse potentiometer setting, linear voltage setting, curve voltage setting, analog current setting, serial communication setting, etc. Can be switched in a variety of ways.	
	Auxiliary frequency source	Digital setting, panel pulse potentiometer setting, linear voltage setting, curve voltage setting, analog current setting, serial communication setting, etc. Can be	

Item		Specifications
		switched in a variety of ways.
	Digital input terminal	Multiple auxiliary frequency sources. Frequency synthesis and frequency fine-tuning can be performed
	Analog input terminal	There are four DI1-DI4, of which DI4 supports high-speed pulse input, up to 20kHz input, and supports NPN PNP switching
Basic function	DC braking function	DC braking frequency: 0.00 Hz to 60.00 Hz; Braking time: 0.0s to 60.0s; Braking action current value: 0.0% to 150.0%
	V/F curve	Linear, multi-point type, square type, 1.1-1.9 power curve, V/F completely separated type.
	Acceleration and deceleration curves	Linear or S-curve acceleration and deceleration mode, acceleration and deceleration time range: 0-6500s.
	Multi-speed operation	Up to 16 segment speeds are achieved through the control terminal.
	External keyboard	Standard, can upload and down-transfer inverter function code information, to achieve fast parameter replication.
	Built-in PID	It is convenient to realize the closed-loop control system of process control.
	Automatic voltage adjustment AVR	Standard, automatic current and voltage limit during operation to prevent frequent overvoltage trip
	Overvoltage over loss rate control	Automatic current and voltage limit during operation to prevent frequent over voltage trip
	Fast current limiting function	The standard configuration minimizes over current faults and protects the normal operation of the equipment.
	Torque qualification and control	Automatic torque limit during operation to prevent frequent over current tripping;
	Power on the safety self-test of peripheral devices	It can realize the safety detection of peripheral devices such as grounding and short circuit
	Timing control function	Timing control function: set time range 0h to 65000h
	Defensive function	Power-on motor short circuit detection, input and output phase loss protection, over current protection, over voltage protection, under voltage protection, overheat protection, overload protection

Item		Specifications
	LED display	5-place LED display
Display and keyboard operation	Parameter locking function	Set parameter read-only control to prevent misoperation
	Place of use	Indoor, free from direct sunlight, no dust, corrosive gas, flammable gas, oil mist, water vapor, dripping or salt
Service environment	Altitude	Less than 1000m; When the sea level is higher than 1000m, the sea level must be reduced by 1% for every 100m rise. The maximum sea level is 2000m
	Environment temperature	-20℃-45℃, derating is required when the temperature exceeds 45℃. For every 1℃ increases in the ambient temperature, the derating is about 1%. The maximum ambient temperature is 50℃
	Humidity	≤95%RH,avoid condensation
	Vibration	Vibration acceleration less than 0.6g
	Storage temperature	-25℃-60℃

Table 1-1-1 Technical specifications

1.2 Product nameplate

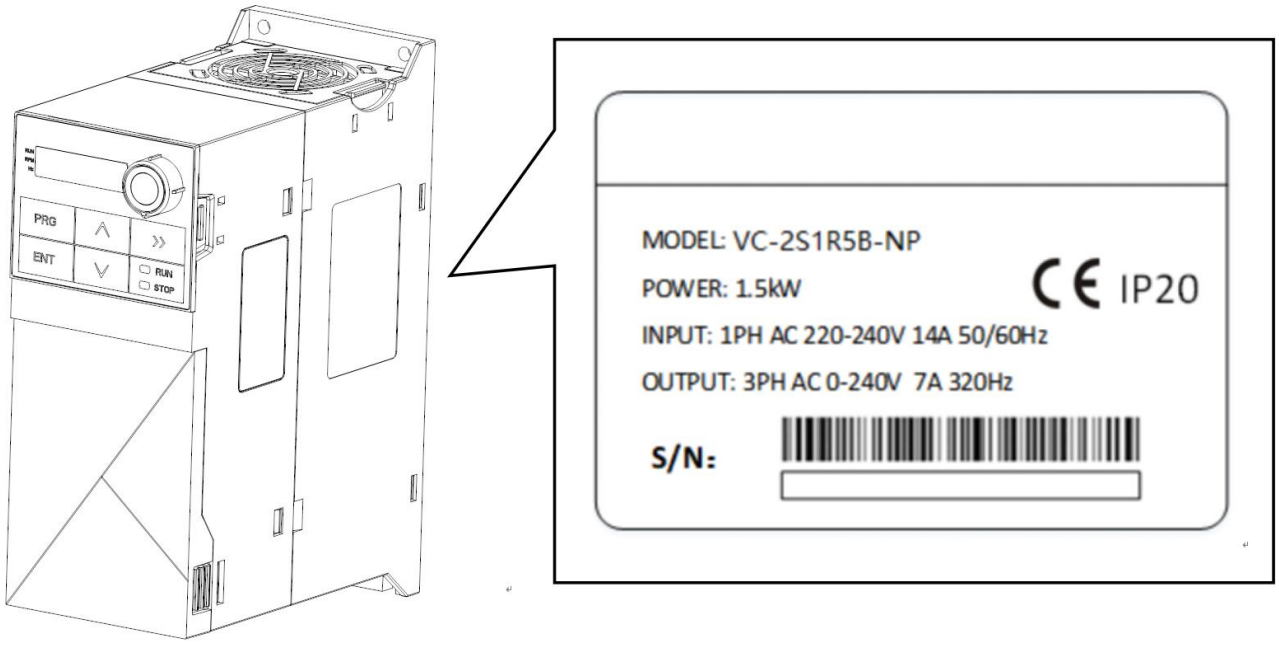

Figure 1-2-1 Product nameplate

1.3 Model coding

VC - 2 S 1R5 B - E

① ② ③ ④ ⑤ ⑥

Field	Number	Marking instruction	Concrete content
VC	①	Product series abbreviation	VC: Multi-function vector VFD series
2	②	Voltage grade	2: 220VAC; 4: 380VAC;
S	③	Power supply phase number label	S: Single-phase; T: Three-phase
1R5	④	Power range	1R5-1.5kW, R stands for decimal point
B	⑤	Built-in brake unit	B: Built-in brake unit
E	⑥	Machine version	E: English version

Table 1-3-1 Model field comment

1.4 Product model

Product model	Rated power	Power capacity	Input current	Output current	Motor G/P	
	kW	kVA	A	A	kW	HP
Input: Single-phase 200 to 240V & Output: Three-phase 0 to 220V						
VC-2SR75B-E	0.75	1.5	8.2	4.5	0.75	1
VC-2S1R5B-E	1.5	3	14	7	1.5	2
VC-2S2R2B-E	2.2	4	23	9.6	2.2	3
Input: Three-phase 380 to 480V & Output: Three-phase 0 to 380V						
VC-4TR75B-E	0.75	1.5	3.4	2.5	0.75	1
VC-4T1R5B-E	1.5	3	5.0	3.8	1.5	2
VC-4T2R2B-E	2.2	4	5.8	5.1	2.2	3
VC-4T004B-E	4	5.9	10.5	9	4	5.5
VC-4T5R5B-E	5.5	8.9	14.6	13	5.5	7.5
VC-4T7R5B-E	7.5	11	20.5	17	7.5	10
VC-4T011B-E	11	17	26	25	11	15
VC-4T015B-E	15	21	35	32	15	20
VC-4T018R5B-E	18.5	24	38.5	37	18.5	25
VC-4T022B-E	22	30	46.5	45	22	30
VC-4T030B-E	30	40	62	60	30	40
VC-4T037B-E	37	57	76	75	37	50

Table 1-4-1 Produce model table

1.5 System connection diagram

When the VFD controls the asynchronous motor to form the control system, various components need to be installed on the input and output side of the inverter to ensure the safety and stability of the system. The product system composition diagram is shown in the following figure.

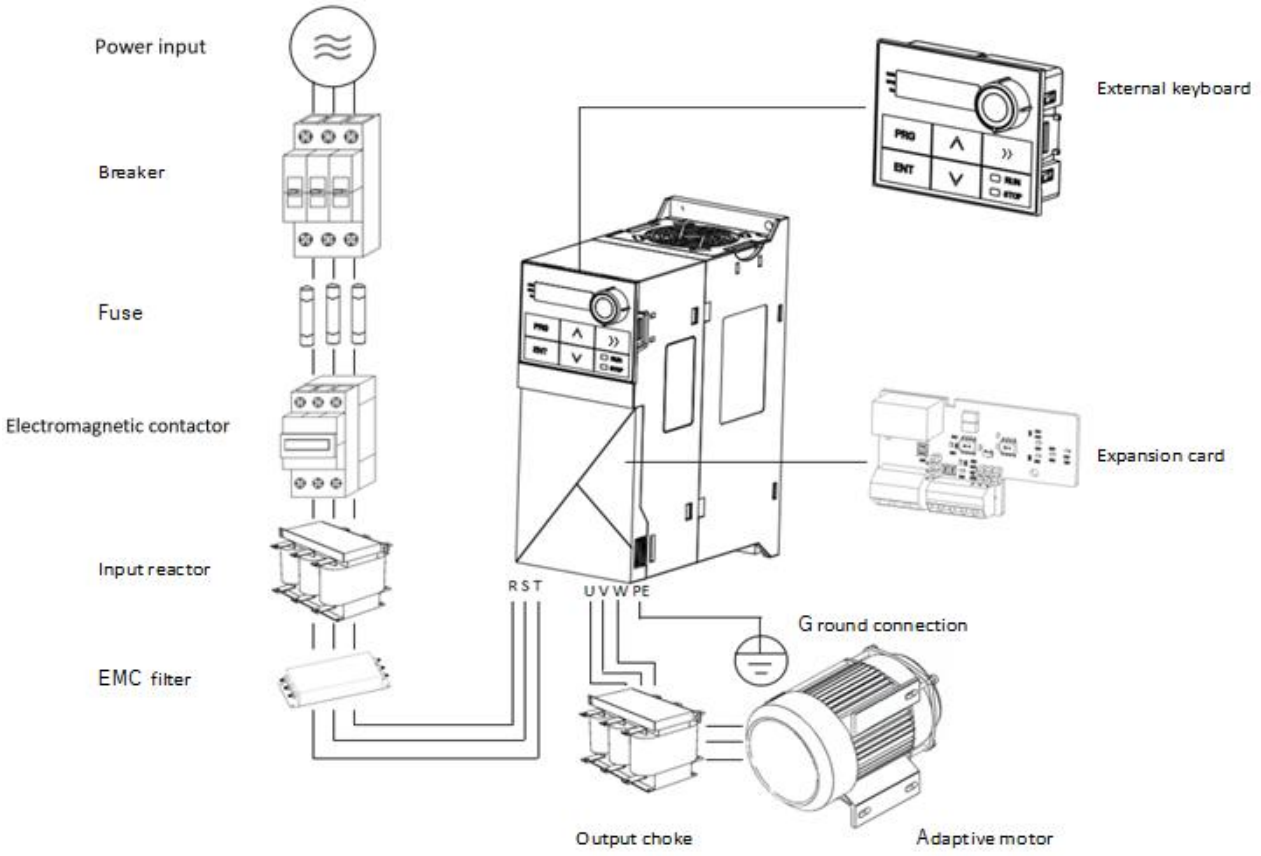

Figure 1-5-1 System construction diagram

Name	Description
Breaker	It is installed between the power supply and the input side of the inverter. Short circuit breaker: Cut off the power when the downstream device is overcurrent to prevent accidents. Leakage protection circuit breaker: High-frequency leakage current may be generated when the inverter is working. In order to prevent electric shock and induce electric fire, please select and install a suitable leakage protection circuit breaker according to the site situation.
Fuse	Prevent accidents due to short circuits and protect post-stage semiconductor devices.
Electromagnetic contactor	When the VFD is powered on or off, do not power on or off the VFD through contactors frequently (at an interval of not less than one hour) or directly start the VFD.

Name	Description
AC input reactor	Improve the power factor on the input side; Effectively eliminate high order harmonics on the input side to prevent damage to other equipment due to voltage waveform distortion; Eliminate the input current imbalance caused by the power supply phase imbalance.
EMC filter	Reduce the VFD external conduction and radiation interference.
Simple filter	Reduce the VFD external conduction and radiation interference.
Output reactor	The output side of the inverter generally contains more high-order harmonics. When the distance between the motor and the inverter is far, there is a large distributed capacitance in the line. One of these harmonics may cause resonance in the loop, which has two effects: ① Damage the motor insulation performance, long time will damage the motor; ② Produce large leakage current, causing VFD protection. Install an output reactor to protect motor insulation and reduce bearing current. (Recommended to increase the stability of the overall equipment)
Magnetic ring, magnetic buckle	A magnetic ring on the input side suppresses noise in the driver input power system. The magnetic ring installed on the output side is mainly used to reduce the external interference of the driver and reduce the bearing current. (Recommended to increase the stability of the overall equipment)
Motor	Please select the suitable motor as recommended.
External keyboard	Body keyboard can be used externally.

Table 1-4-1 Instructions for the use of peripheral electrical components of the system

Chapter 2 Panel display and operation

2.1 Display interface introduction

The buttons on the operation panel can modify the function parameters of the VFD, monitor the working status of the VFD, and control the operation of the VFD (start, stop), etc. Its appearance and function area are shown as follows:

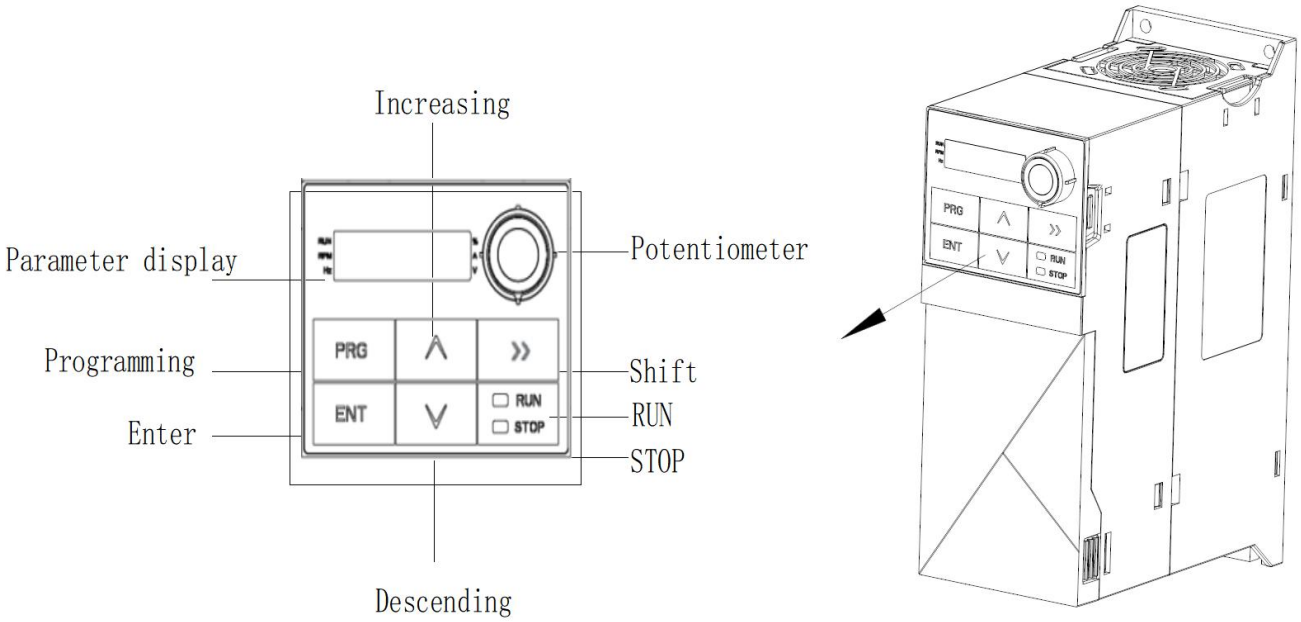

Figure 2-1-1 Operation panel diagram

2.2 Quick on-board debugging operation

Press ENT to enter F0 and display F0.00, press up and down to select parameters, press ENT to enter the selected parameters for setting, press ENT to save the settings, press PRG to return to F0, and then press PRG to return to 50.00 interface.

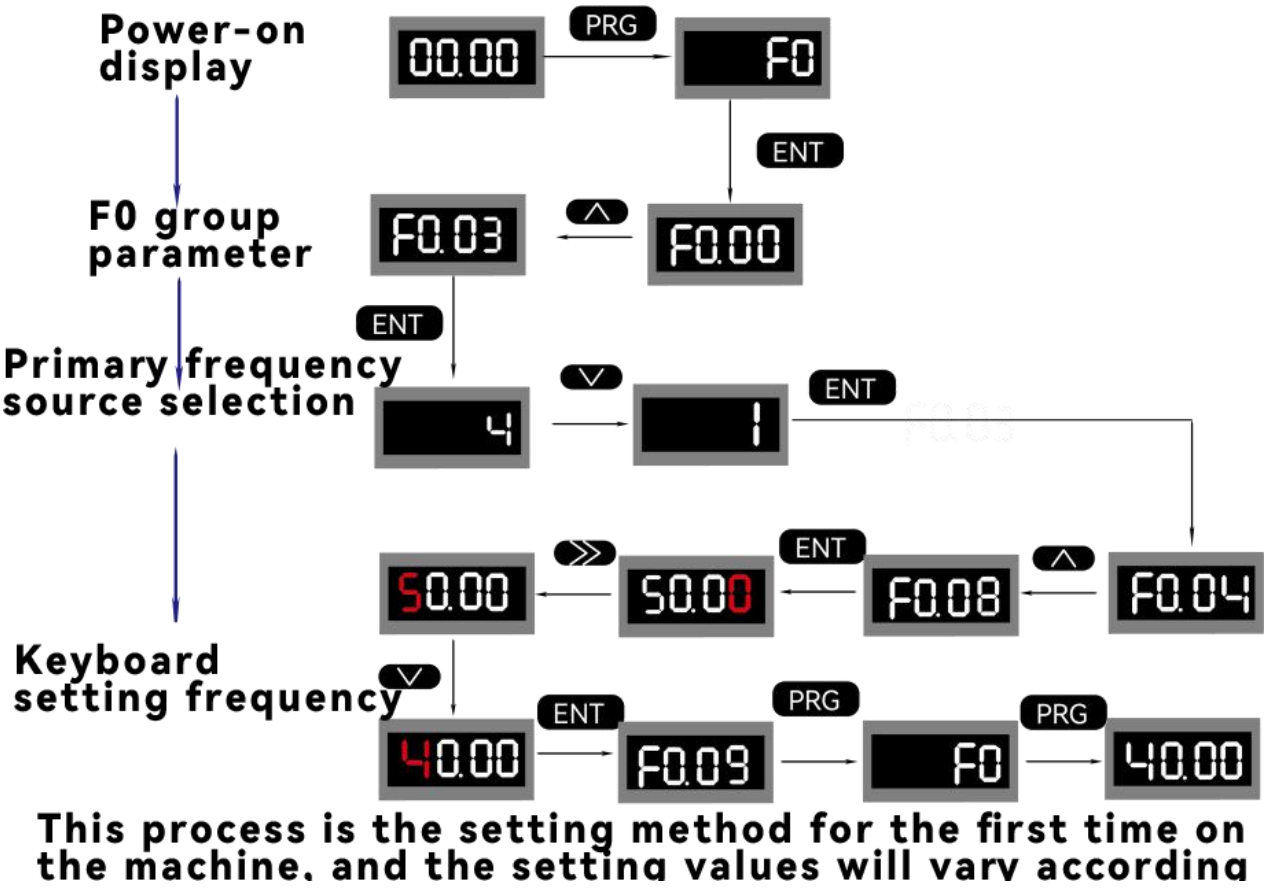

Figure 2-2-1 Rapid debugging process

2.3 Indicator and button function

Item	Name	Function
Indicator light	Indicator light	Hz: Frequency unit; A: Current unit; V: Voltage unit; %: Percentage; RUN: Operation; FWD: Forward rotation
Button	PRG (Programming key)	Level 1 menu Enter or exit
	ENT (Confirm key/Forward &reverse switch)	Enter the menu screen step by step and confirm setting parameters (parameter setting status) Fast forward and reverse rotation of the load motor (in non-parameter setting status)
	△ (Increasing key)	Increment of data or function code
	▽ (Decrement key)	Decrement of data or function code
	>> (Shift key)	The display parameters can be selected in the stop display interface and the run display interface; When modifying a parameter, you can select the modification bit of the parameter.
	RUN (Run key)	In keyboard mode, it is used to run operations.
	STOP (Stop key)	In the running state, press this key to stop the running operation. When the fault alarm is in the state, it can be used for double-bit operation, and the characteristics of the key are restricted by the function code F7.02
Rotary knob	Potentiometer	Can be used as a frequency given source. When the VFD is set with this knob as the frequency source, clockwise rotation increases the given value and counterclockwise decreases the given value.

Table 2-3-1 Indicator and button description

Chapter 3 Component introduction

3.1 Product component

1.The product parts of this series of inverter are described as follows. The components include control keyboard (can be imported), wiring cover, cooling fan, fan cover, VFD body, nameplate location, dustproof cover, enclosure, etc.

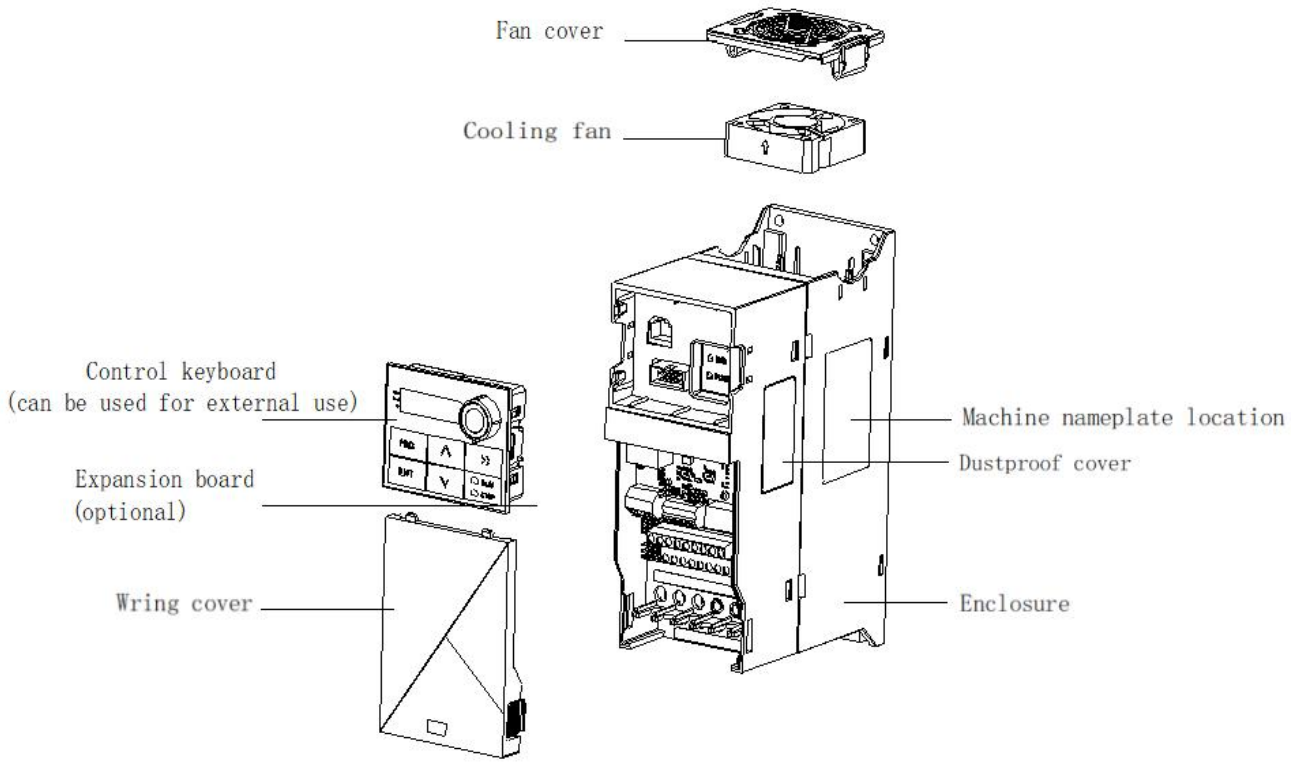

Figure 3-1-1 Product part diagram

2. The dimensions and schematic diagram of the control keyboard panel are as follows:

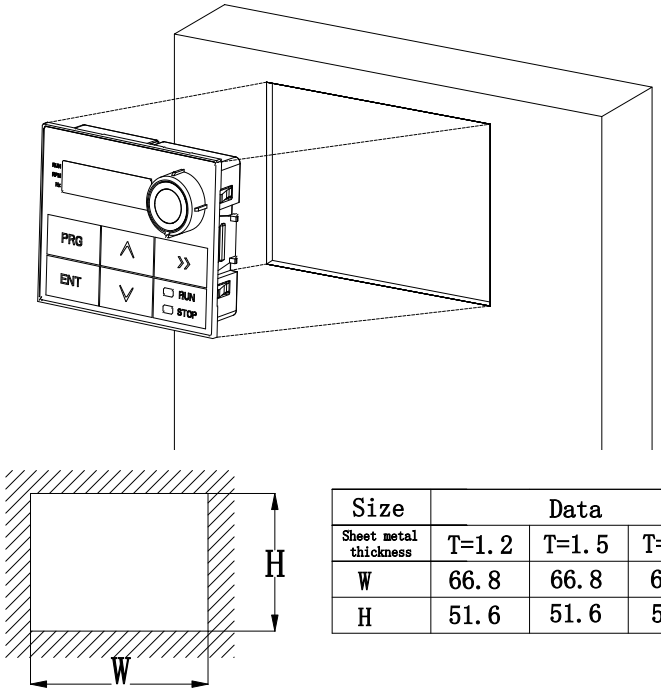

Size	Data		
Sheet metal thickness	T=1.2	T=1.5	T=2.0
W	66.8	66.8	66.8
H	51.6	51.6	51.6

Figure 3-1-2 Panel opening dimensions diagram

The external control keyboard diagram is shown below:

After connecting the network cable, you can operate the external control keyboard.

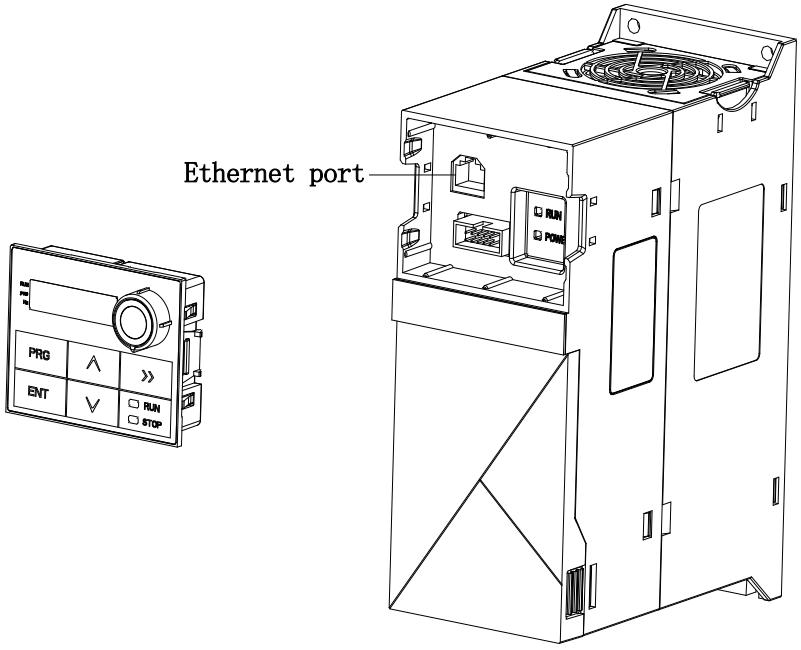

Figure 3-1-3 External keyboard diagram

Item	Describe
Ethernet cable specifications	HSYV
Recommended distance	≤150m

✎**Note:** It is recommended that the maximum communication distance of the common HSYV is

100m. After the laboratory environment test, the maximum external communication distance is 150m, but the actual use effect is related to the field trial situation. If there are some interference sources, the maximum communication distance will be reduced to a certain extent, which is a normal phenomenon. At that time, interference needs to be removed or a higher quality network cable connection can reduce some of the impact. Do not use network cables with unwarranted quality to avoid adverse impact on the performance of the device.

3.2 Use in special scenarios

Scenario 1: The environment is humid or heat dissipation is enhanced

When the ambient humidity is high and condensation is easy to occur, remove the side panels on both sides and maintain ventilation to avoid condensation, which will affect the product performance.

Scenario 2: Dust pollution occurs in the environment or horizontal and side-by-side installation occurs

When there is dust in the surrounding environment or when the product is installed side by side, the side panels on both sides are installed without disassembly to prevent dust from entering and affecting the product performance.

※① Accessory cover is included with the case on some models only;

※② Due to the additional protection process added to the electrical components of the product, the installation of the cover plate has almost no impact on the product life. If yes, install it as required.

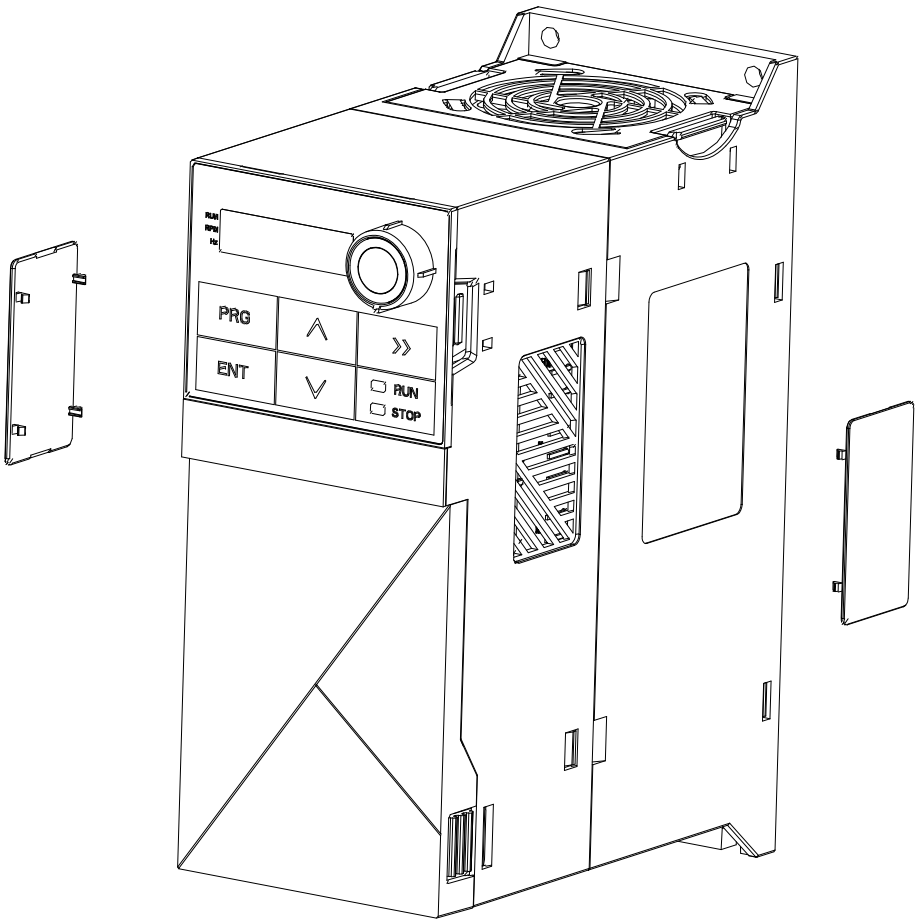

Figure 3-2-4 Diagram of side openings

3.3 Structural design specifications

Easy maintenance:

The cooling fan can be removed independently without complicated operation.

Independent air duct:

A full range of structural independent air duct design, increase product protection ability, to avoid circuit board moisture/dust problems.

Efficient heat dissipation:

Side opening ventilation: increase heat dissipation efficiency and extend product service life. (Additional dust cover for measuring holes, flexible selection).

Easy to use: Standard with detachable keyboard, with control cabinet installation.

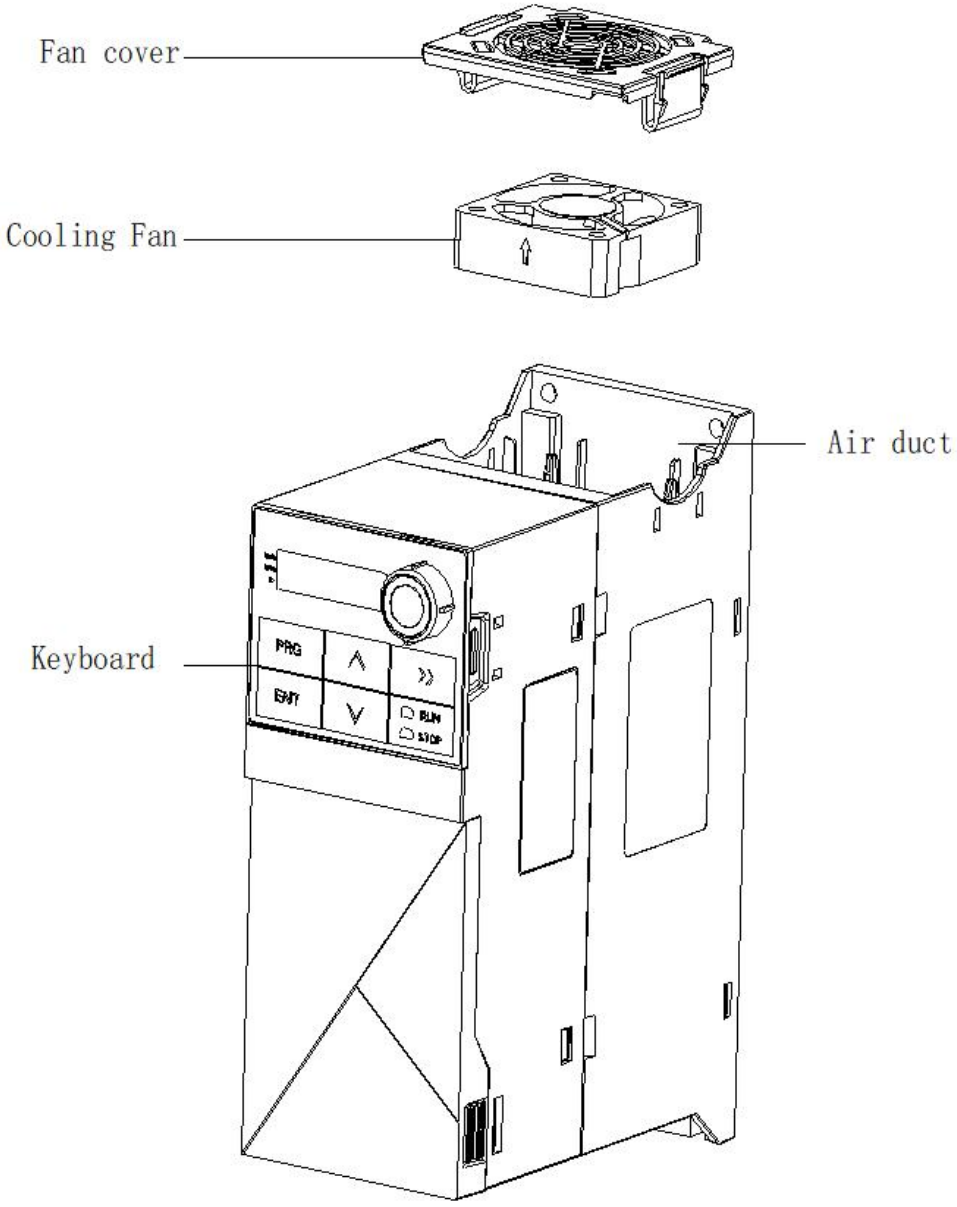

Figure 3-3-5 Detachable diagram of an independent fan

Chapter 4 The dimensions and terminals

4.1 Single-phase 220V machine structure dimensions (Unit: mm)

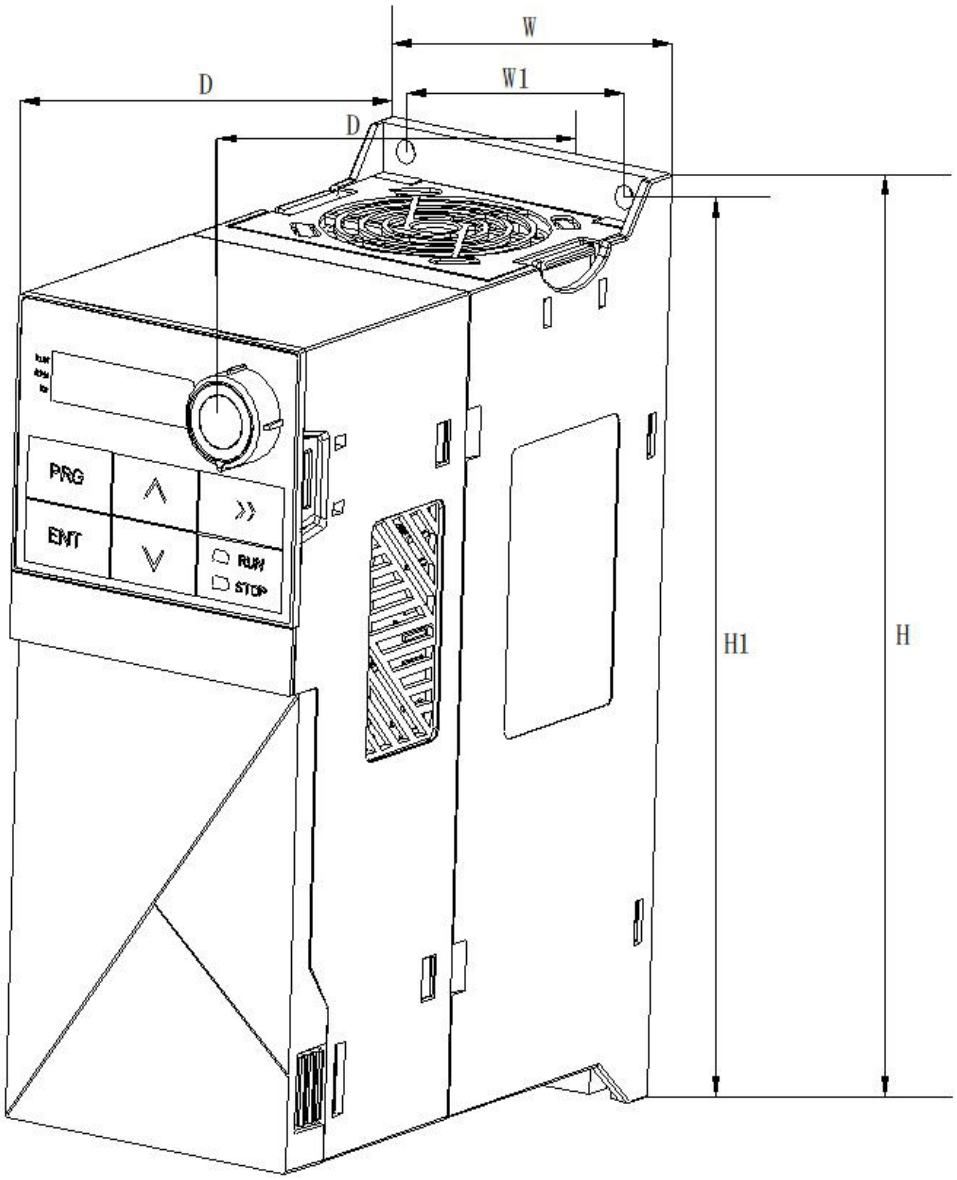

Figure 4-1-1 Outline dimension

Model	External dimension				Installation dimension		Mounting dimension
	H	W	D	D1	H1	W1	d
VC-2SR75B-E	190	72	146	138	180	56	5
VC-2S1R5B-E							
VC-2S2R2B-E							

Table 4-1-1 Outline dimension parameter

4.2 There-phase 380V machine structure dimensions (Unit: mm)

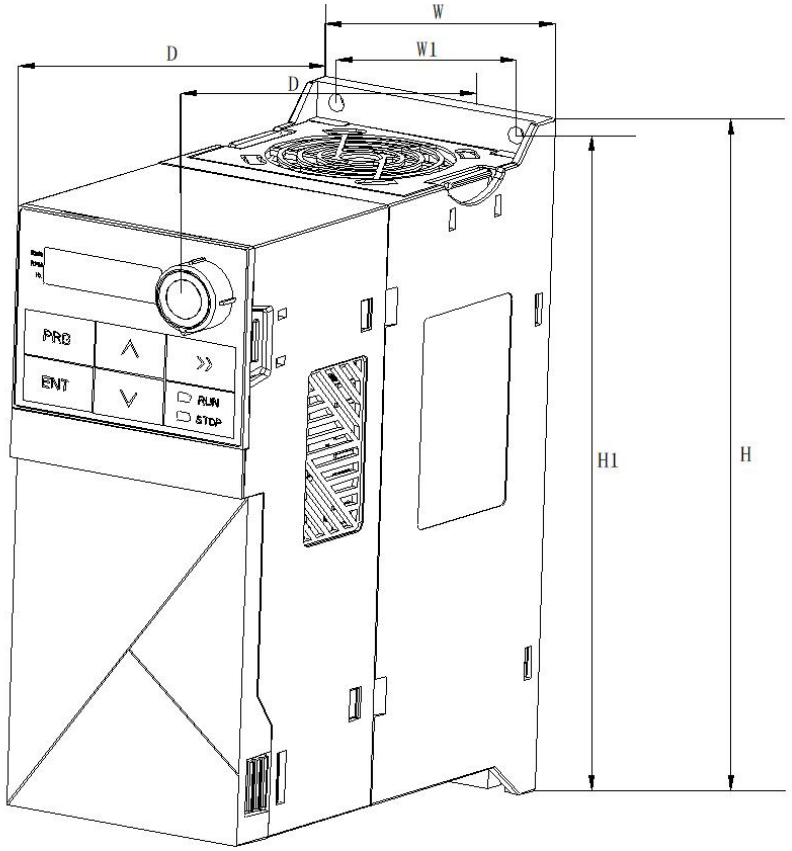

Figure 4-2-1 Outline dimension

Model	External dimension				Installation dimension		Mounting dimension
	H	W	D	D1	H1	W1	d
VC-4TR75B-E	190	72	146	138	180	56	5
VC-4T1R5B-E							
VC-4T2R2B-E							
VC-4T004B-E							

Table 4-2-1 Outline dimension parameter

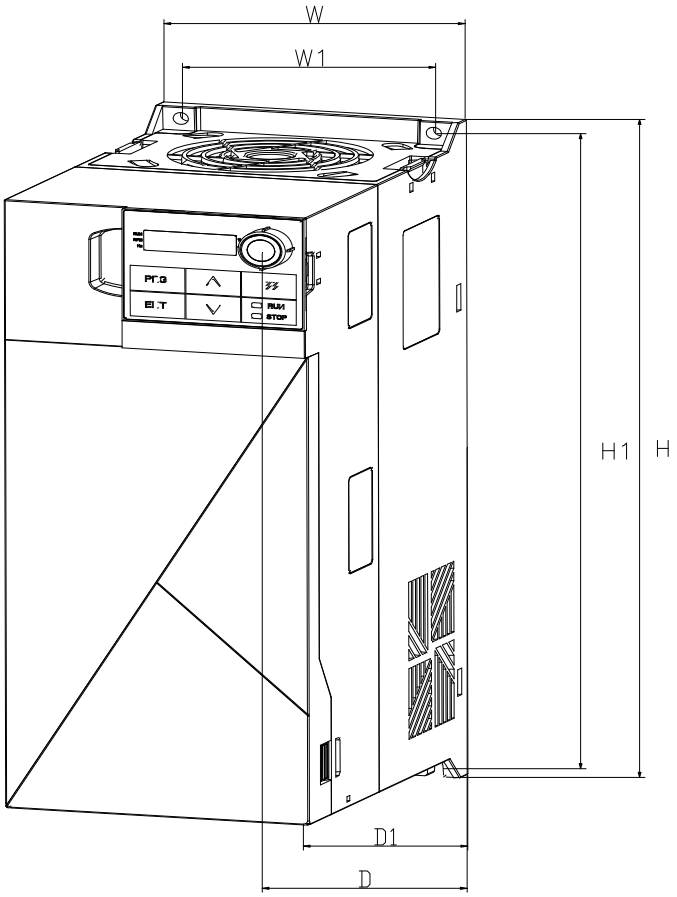

Figure 4-2-2 Outline dimension

Model	External dimension				Installation dimension		Mounting dimension
	H	W	D	D1	H1	W1	d
VC-4T5R5B-E	250	95	153.6	145	240	80	5
VC-4T7R5B-E							

Table 4-2-2 Outline dimension parameter

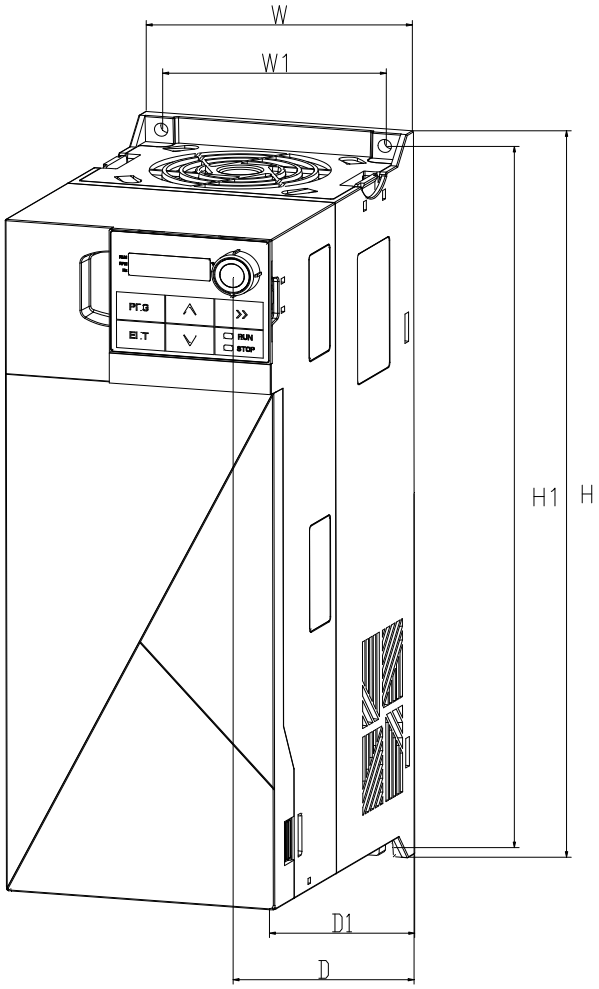

Figure 4-2-3 Outline dimension

Model	External dimension				Installation dimension		Mounting dimension
	H	W	D	D1	H1	W1	d
VC-4T011B-E	334	120	188.6	180	322	100	6
VC-4T015B-E							

Table 4-2-3 Outline dimension parameter

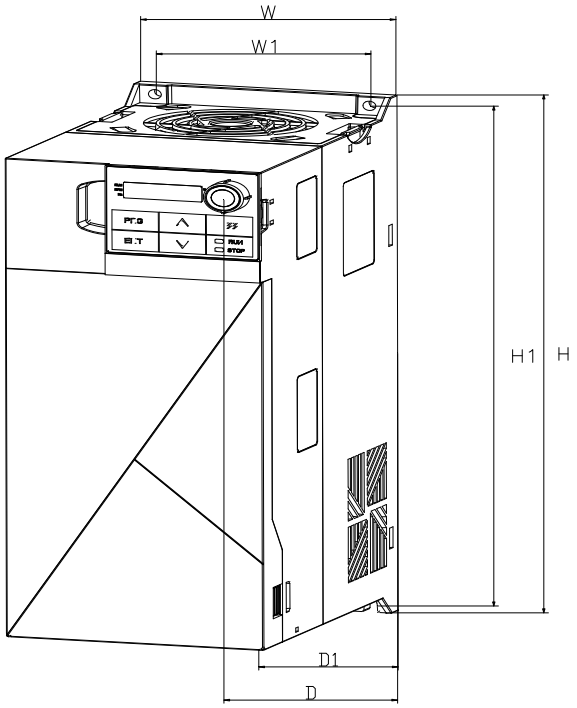

Figure 4-2-4 Outline dimension

Model	External dimension				Installation dimension		Mounting dimension
	H	W	D	D1	H1	W1	d
VC-4T018R5B-E	388	145	195.1	182.7	374	116	6
VC-4T022B-E							

Table 4-2-4 Outline dimension parameter

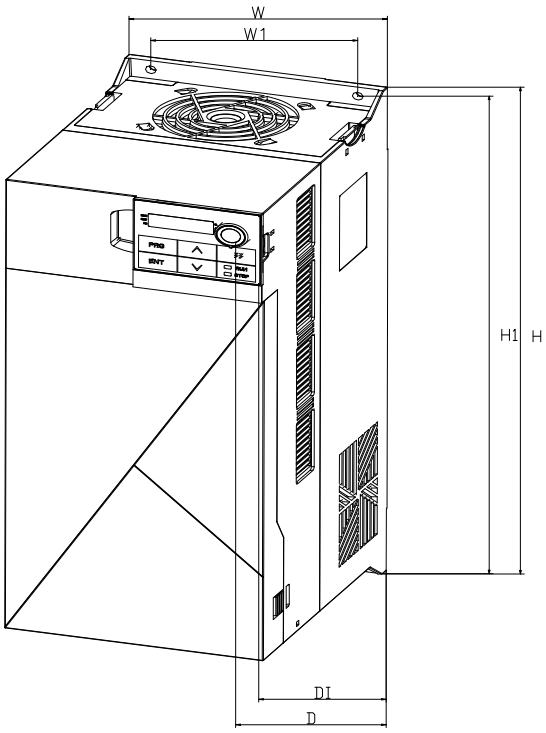

Figure 4-2-5 Outline dimension

Model	External dimension				Installation dimension		Mounting dimension
	H	W	D	D1	H1	W1	d
VC-4T030B-E	450	180	204	195	430	144	7
VC-4T037B-E							

Table 4-2-5 Outline dimension parameter

4.3 Keyboard structure size (Unit: mm)

Specification	Single-phase 220V: 0.75kW-2.2kW Three-phase 380V: 0.75kW-22kW
Keyboard	
Size	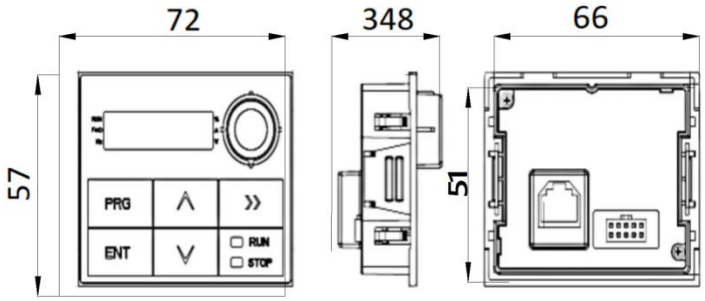
Configuration	Standard configuration

Table 4-3-1Keyboard size and installation

4.4 Main loop terminals and functions

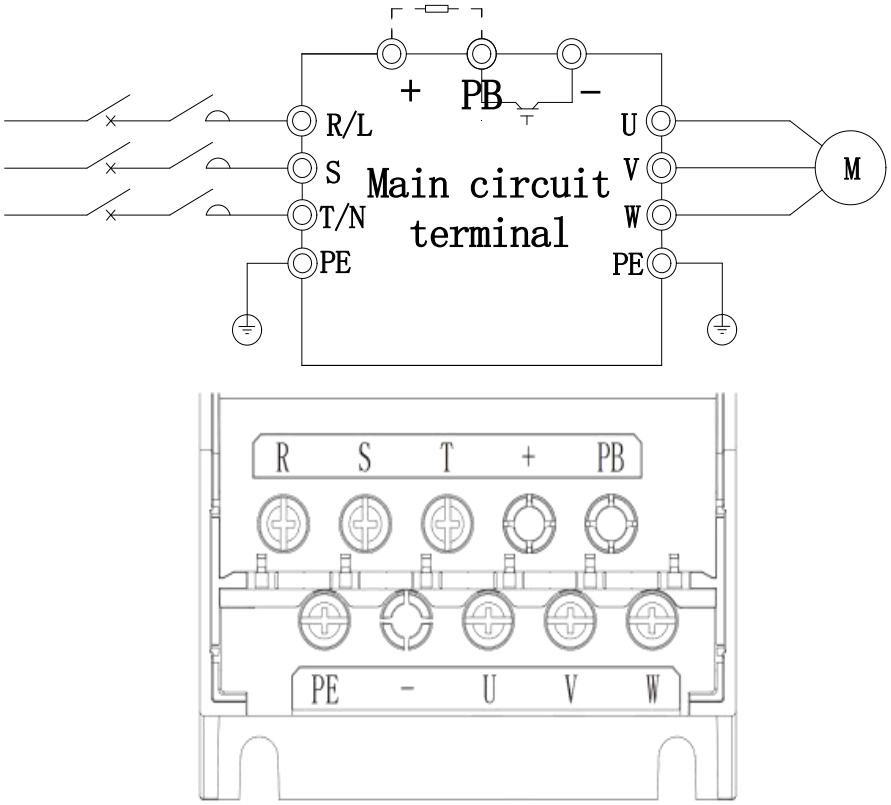

Figure 4-4-1 Main circuit terminal

Terminal mark	Name	Description
R, S, T	Three-phase power input terminal	The three-phase AC power input is connected to the terminal
(+), (-)	DC bus positive and negative terminals	Common DC bus input terminals
(+), PB	Brake resistors are connected to terminals	Brake resistors are connected to terminals
U, V, W	Inverter output terminal	Connected three-phase motor
⏚	Ground terminal	Touch the ground

Table 4-4-1Main loop terminals and functions

4.5 Control loop terminals and functions

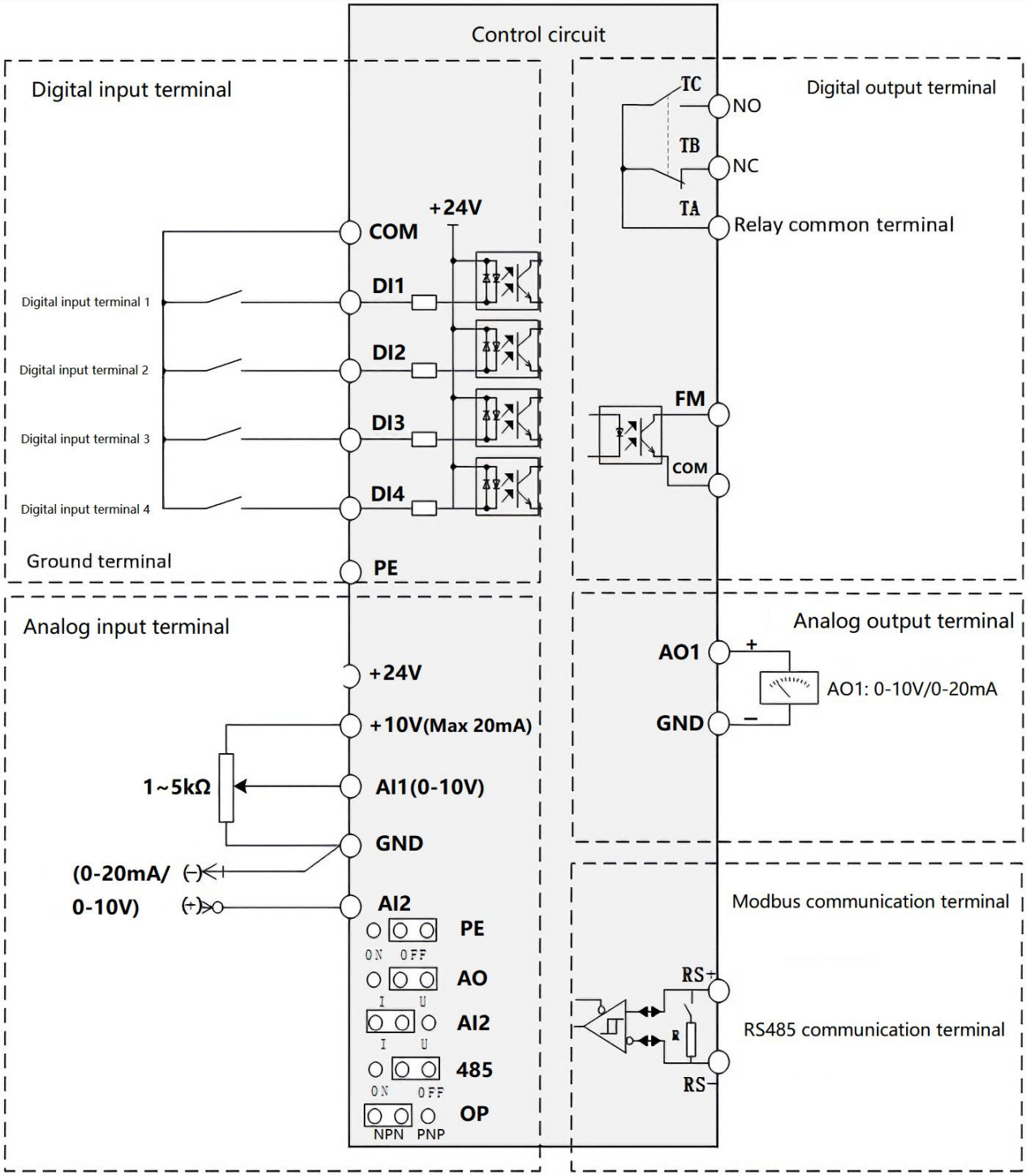

Figure 4-5-1 Control loop terminal diagram

GND	+10V	RS+	RS−	FM		TA	TB	TC

AO	AI1	AI2	DI1	DI2	DI3	DI4	+24V	COM

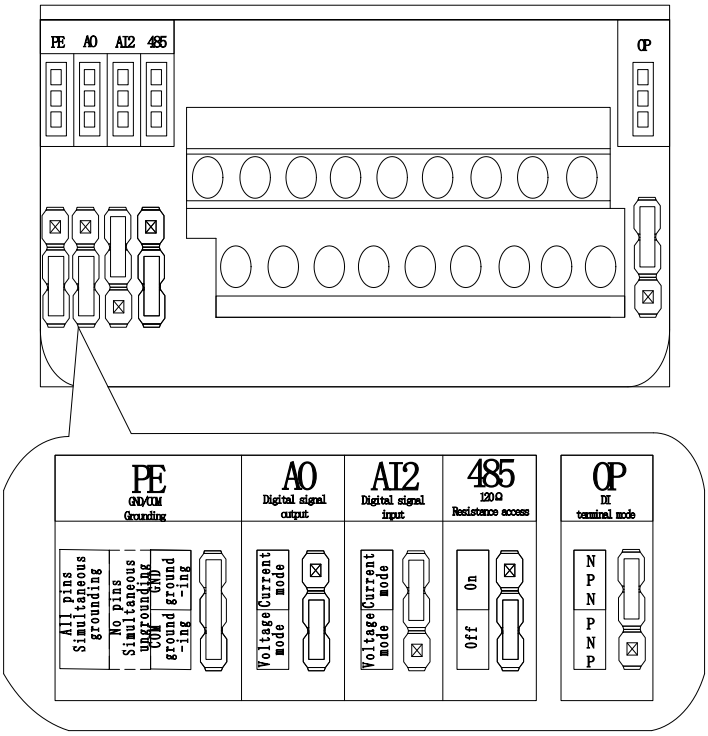

Figure 4-5-2 Jumper terminal function diagram

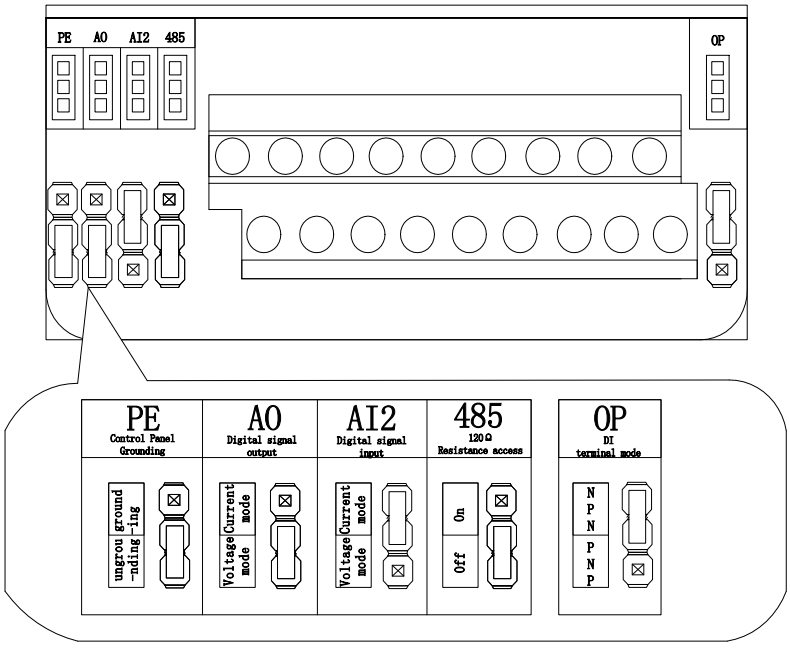

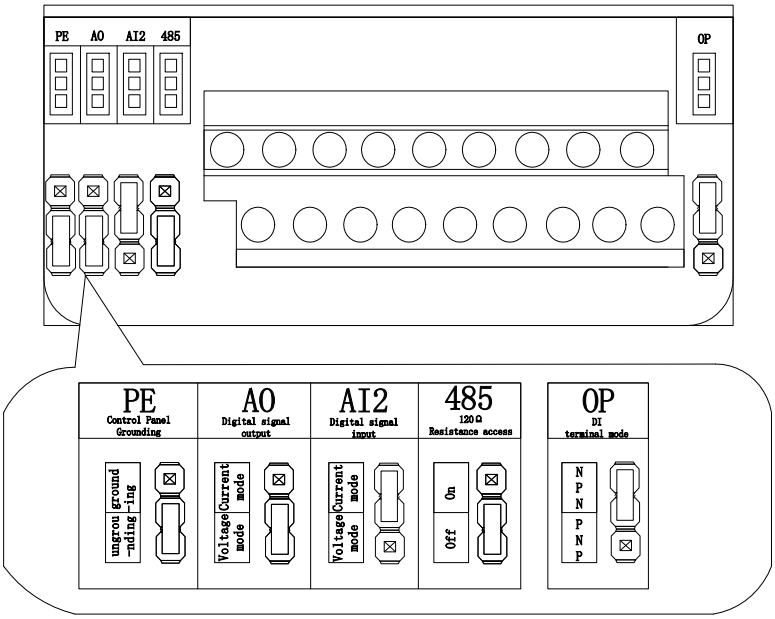

Figure 4-5-3 Jumper terminal function diagram 2

✎**Note:** The VFD you received may have two jumper function states, which is normal, and there is no difference in the use effect of the product. Please refer to the figure above to use the function correctly based on the actual status of the product. If there is any problem, please contact our technical support engineers.

The jumper terminal is functional in icon state 1		
Transfer jumper	Chosen position	Function description
PE	Connect the upper two pins	GND grounding
	Connect the lower two pins	COM ungrounding
	All three pins are connected (default)	GND/COM simultaneous grounding
	All three pins are not connected	GND/COM simultaneous ungrounding
AO	Connect the upper two pins	AO current output 0-20mA
	Connect the lower two pins (default)	AO voltage output 0-10V
AI2	Connect the upper two pins (default)	AI current input 4-20mA Range can be modified by parameter
	Connect the lower two pins	AI voltage input 0-10V
485	Connect the upper two pins	RS485 communication connects to the 120Ω terminal resistor
	Connect the lower two pins (default)	RS485 communication disconnect 120Ω terminal resistor
OP	Connect the upper two pins (default)	NPN
	Connect the lower two pins	PNP

The jumper terminal is functional in icon state 2		
Transfer jumper	Chosen position	Function description
PE	Connect the upper two pins	Control panel grounding
	Connect the lower two pins (default)	Control panel ungrounding
AO	Connect the upper two pins	AO current output 0-20mA
	Connect the lower two pins (default)	AO voltage output 0-10V
AI2	Connect the upper two pins (default)	AI current input 4-20mA Range can be modified by parameter
	Connect the lower two pins	AI voltage input 0-10V
485	Connect the upper two pins	RS485 communication connects to the 120Ω terminal resistor
	Connect the lower two pins (default)	RS485 communication disconnect 120Ω terminal resistor
OP	Connect the upper two pins (default)	NPN
	Connect the lower two pins	PNP

Category	Symbol	Name	Function
Power supply	+10V-GND	+10V	To provide extend +10V power supply, the maximum output current is 20mA. Generally used as an external potentiometer working power supply.
	+24V-COM	+24V	Provide external +24V power supply, maximum output current: 150mA. Generally used as digital input and output terminals working power supply and external sensor power supply.
Analog input	AI1-GND	Analog input terminal 1	1. The range of input voltage: DC 0V to 10V 2. Input impedance: 100kΩ
	AI2-GND	Analog input terminal 2	1. The range of input: DC 0V to 10V/0mA to 20mA, it is determined by the AI2 jumper selection on the control board. 2. Input impedance: Voltage input 100kΩ, current input 500Ω
Digital input	DI1	Digital input1	1. Optocoupler isolation 2. Input impedance: 4kΩ 3. level input voltage range: 9V to 30V
	DI2	Digital input2	
	DI3	Digital input3	
	DI4	Digital input4	

Category	Symbol	Name	Function
Analog output	AO1-GND	Analog output1	AO1 determines the voltage or current output by selecting the AO jumper on the control board. The output voltage range is 0V to 10V Output current range: 0mA to 20mA AO2 can only be a voltage output.
	AO2-GND	Analog output2	
Digital output	FM-COM	Digital input1	Optocoupler isolation, bipolar open collector output Output voltage range: 0V to 24V Output current range: 0mA to 50mA Subject to function code F6.00 FM Terminal Output Mode Selection

Category	Symbol	Name	Function
Relay output	TA-TB	NC	Contact drive capability: AC 250V, 3A, Cosø=0.4; DC 30V, 1A
	TA-TC	NO	
RS485 communication	RS+	Communication terminal positive	RS485 differential signal positive end
	RS-	Communication terminal negative	RS485 differential signal negative end

Table 4-5-1 Control terminals and functions

Chapter 5 Installation and wiring

5.1 Installation preparation

Before installing this series of inverter, you need to understand certain installation preparations to ensure that the equipment has enough installation space, heat dissipation space and correct installation direction, including: single machine installation, multi-machine installation and installation direction. The following figure shows the installation details.

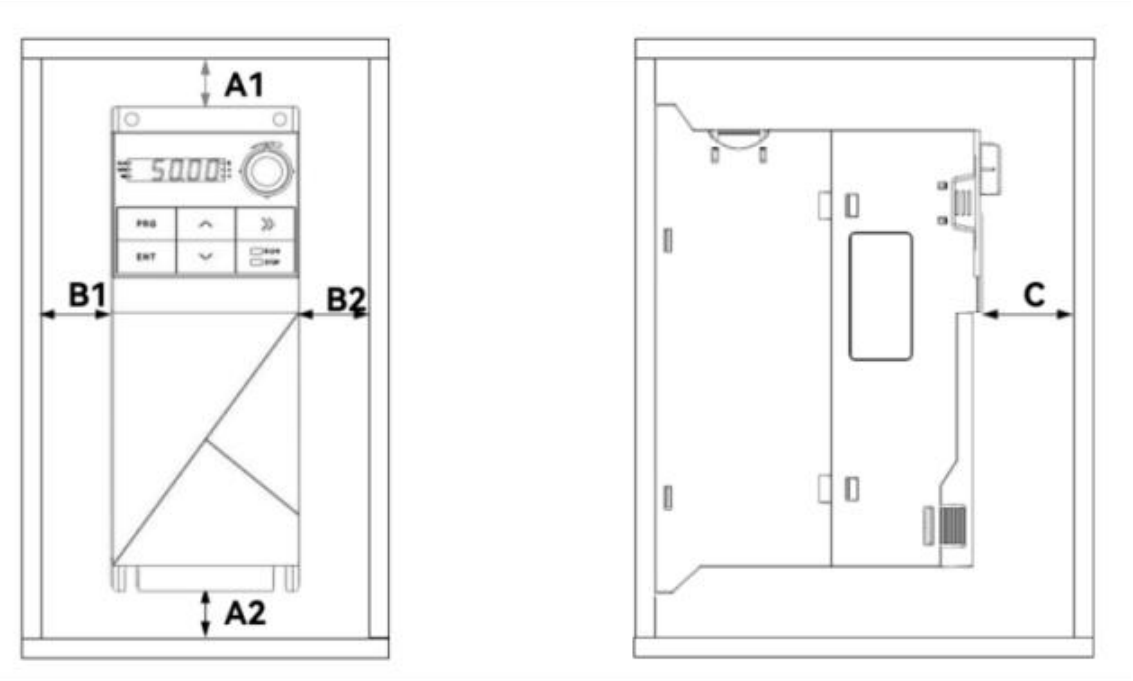

Figure 5-1-1 Single machine installation space

1.Single machine installation:

Location designation	Dimensional requirement(mm)
A1	≥150
A2	≥150
B1	≥15
B2	≥15
C	≥50

Table 5-1-1 Single machine installation space

2.Multiple machines installed side by side:

When the device is installed side by side, because the heat is dissipated from the bottom up, the clearance requirements in the B1 and B2 directions are not limited, and the user can adjust the interval according to the specific requirements.

Special note: If the bus communication expansion board is needed, the side size of a single device (B1B2 should be ≥80mm)

Refer to Figure 5-1-1 and Table 5-1-1 for specific installation gaps in A1 and A2 directions.

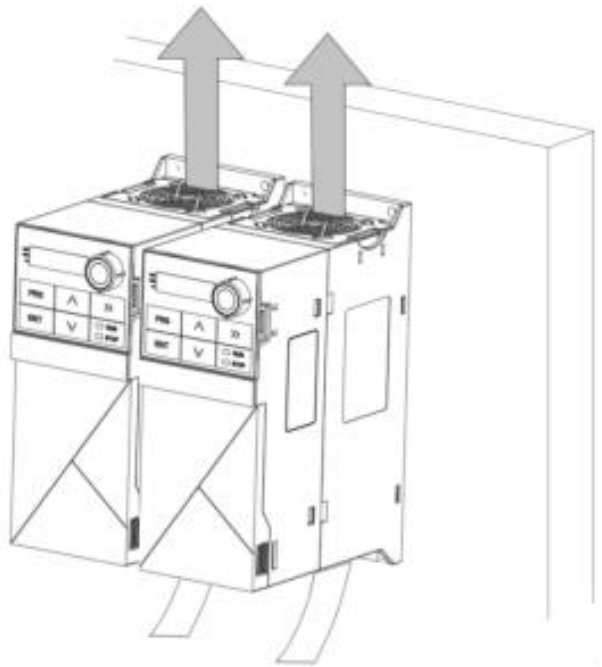

Figure 5-1-2 Multiple machines installed side by side

3.Multiple machines stacked vertically:

In vertical stack installation, the heat dissipation direction of the lower machine will cause the temperature of the upper machine to rise, which will cause the overheat or overload fault of the upper machine. Therefore, the two machines need to be separated by heat insulation air deflectors. It is recommended that the distance between the machine and the heat insulation deflector is not less than 150mm.

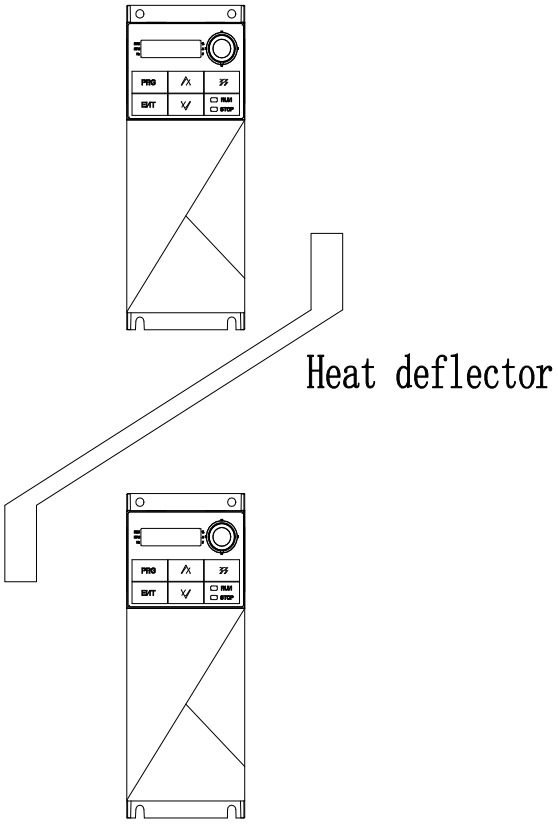

Figure 5-1-3 Multiple machines installed up and down

4.Installation direction

① Vertical installation. When installing the machine, do not lean forward, sideways, horizontal or upside down.

②When installing the machine, ensure that the wall or machine mounting wall is strong enough to hold the screws and bear the weight of the machine.

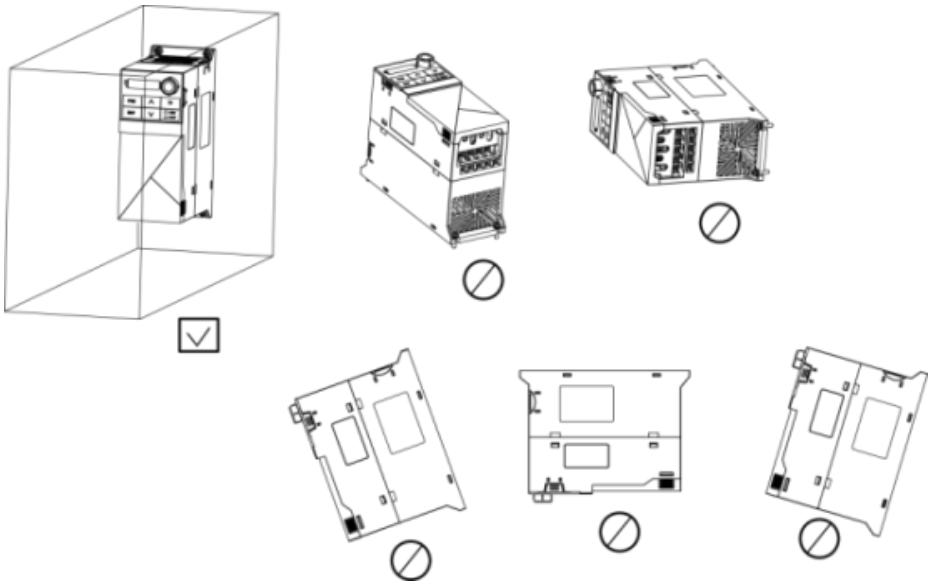

Figure 5-1-4 Installation direction diagram

5.2 Installation of mechanisms

When installing wall-mounted screws, do not only fix the top two nuts of the machine. Otherwise, the machine may fall and be damaged.

1.Fixed machine

Install the screws correctly, as shown in the following figure.

Recommended setting screw specifications	Maximum mounting screw torque	
M4	7.8kgf·cm	6.77lbf·in

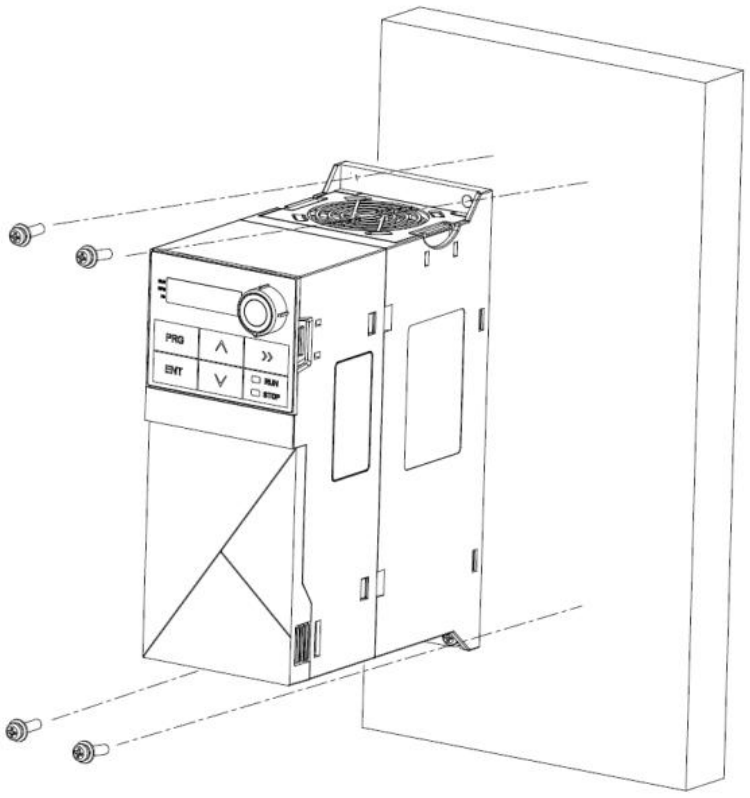

Figure 5-2-1 Screw installation diagram

2.Driver wiring

Open the driver cover and secure the cables to the U, V, W, and PE terminals using a screwdriver, as shown in the following figure.

Power range	Recommended wiring specifications	Maximum mounting torque	
0.75-7.5kW	10-18AWG	14.98kgf·cm	13 lbf·in

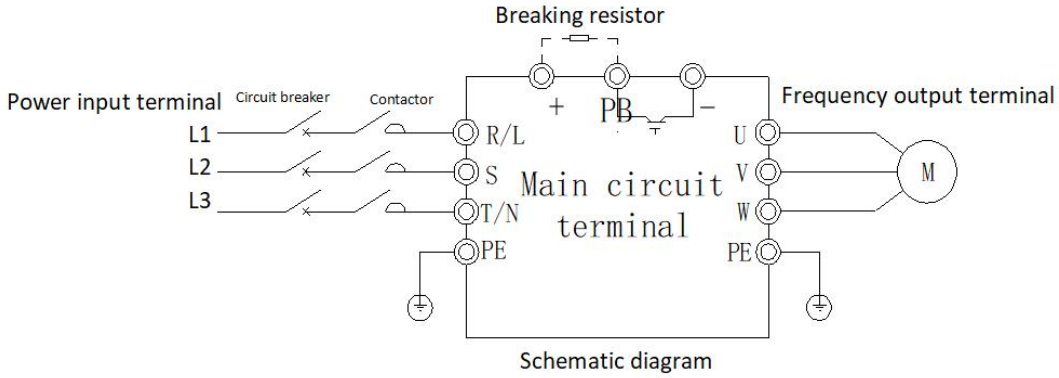

Schematic diagram

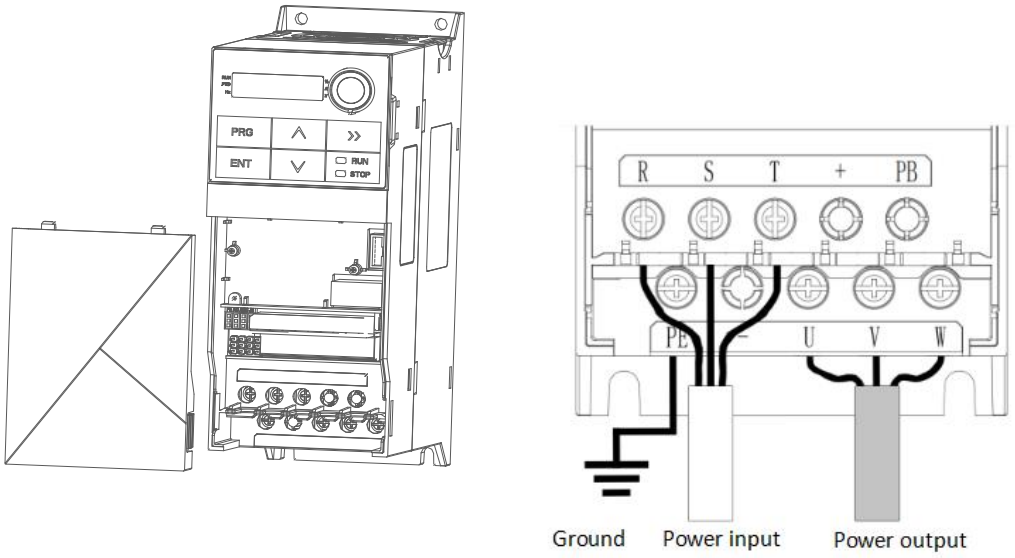

Figure 5-2-2 Schematic diagram

5.3 Select parts installation instructions

Type	Terminal name	Terminal symbol
Standard expansion plate	Digital input terminal	DI5
		DI6
	Analog input terminal	AI3
	Analog output terminal	AO2
	Relay output terminal	TA-TB (NC)
		TA-TC (NO)

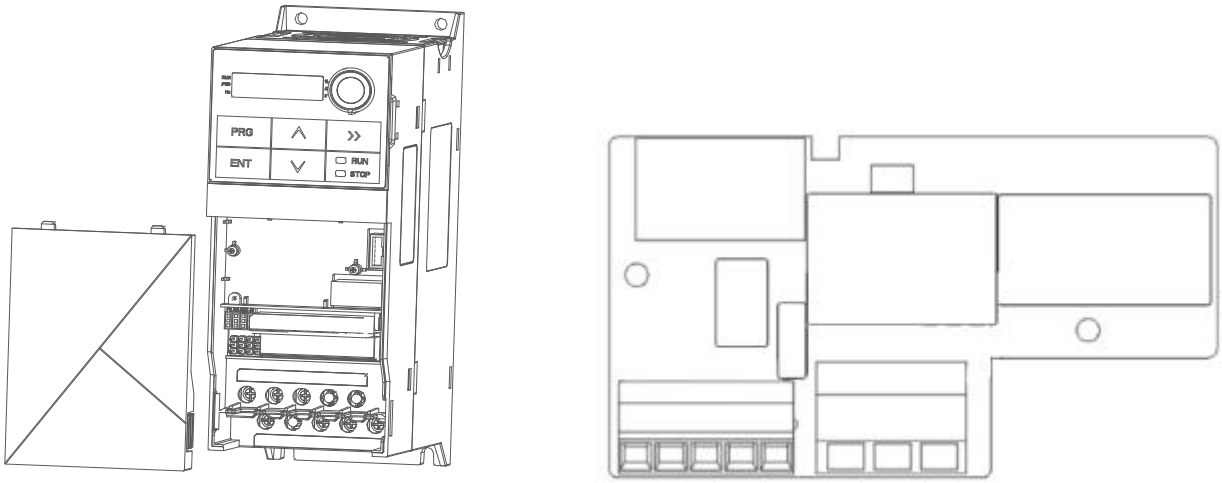

Figure 5-3-1 Expansion board diagram

5.4 Common control loop wiring instructions

1. Analog AI2 terminals are used for wiring

The AI2 terminal on the inverter is used to input external analog control signals. Currently, VC products can receive signals ranging from current type 0-20mA or voltage type 0-10V. This is achieved by controlling the AI2 jumper cap near the terminal.

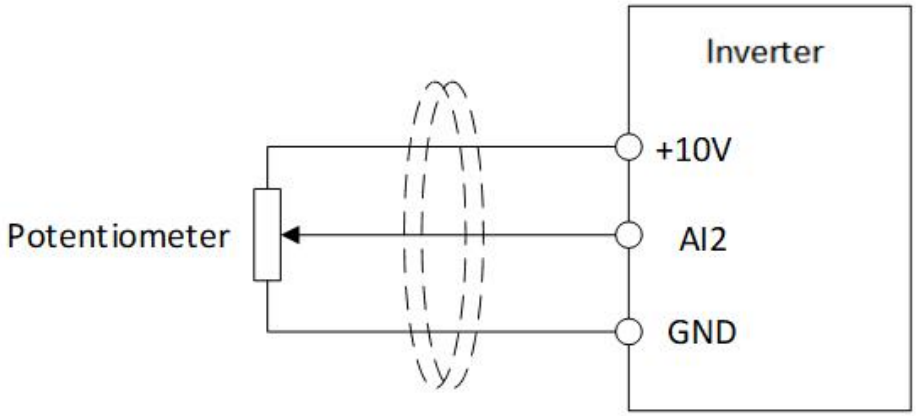

Figure 5-4-1 Voltage type wiring diagram

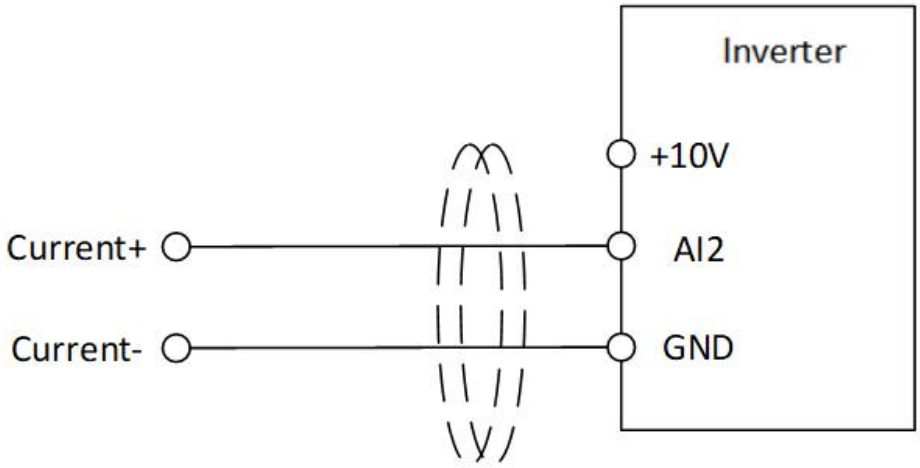

Figure 5-4-2 Current mode wiring diagram

✎**Note:**

①Both AI1 and AI2 support 0-10V voltage input, see Figure 5-4-1

②The dotted line in the figure is a magnetic ring, usually ferrite, which can lead the wire through or around the same direction for 2-3 turns

③Because the analog voltage signal is weak and susceptible to interference, it is generally necessary to use a shielded cable, and the wiring distance is as short as possible. Generally, not more than 20m.

2.Digital input terminals DI1-DI4 are connected

The DI terminal on the inverter is used to input the external digital switching control signal, which is adapted to the NPN type (leakage type), and the PNP type (source type) is realized by controlling

the OP jumper cap beside the terminal.

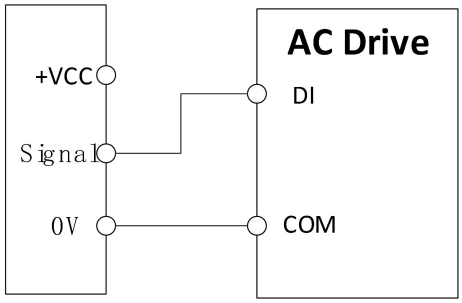

Figure 5-4-3 DI (NPN) power supply wiring diagram

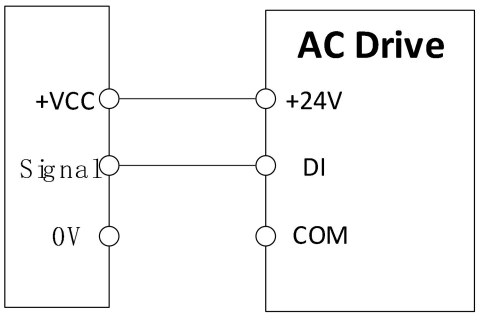

Figure 5-4-4 DI (PNP) schematic diagram

Chapter 6 Function parameter table

○——It indicates that the set value of the parameter can be changed when the inverter is shut down or running.

●——It indicates that the setting value of the parameter cannot be changed when the inverter is in operation;

◎——It indicates that the value of the parameter is the actual detection record value and cannot be changed;

□——It indicates that the parameter is Manufacturer parameter, which can only be set by the manufacturer and cannot be operated by users.

Mailing address description:

The following table indicates the communication addresses in hexadecimal format.

In the following table, the communication address is the RAM address, and the parameter is not saved if the power fails, you need to save, please see the instructions for writing EEPROM in section 7.4.

6.1 Basic parameter set

Function code	Name	Setting range	Default	Property	Modbus address
F0 Basic function parameter group					
F0.00	Motor control mode	0: SVC 1: V/F 2: -	1	●	0x0000
F0.01	Command source selection	0: Operation panel command channel 1: Terminal command channel 2: Serial port communication command channel	0	●	0x0001
F0.02	UP/DOWN standard	0: Operating frequency 1: Set frequency	1	●	0x0002
F0.03	Primary frequency source X selection	0: Digital setting F0.08 (Adjustable terminal UP/DOWN, non-relative after power failure) 1: Digit setting F0.08 (Terminal UP/DOWN adjustable, power down memory) 2: AI1 3: AI2 4: Keyboard potentiometer set 5: The terminal PULSE pulse is set 6: Multi-speed instruction 7: Simple PLC 8: PID 9: Communication setting 10: AI3(Expansion module)	4	●	0x0003
F0.04	Auxiliary frequency source Y selection	Same as F0.03	0	●	0x0004
F0.05	Range of auxiliary frequency source Y	0: Relative to the maximum frequency F0.10 1: Relative to the frequency source X	0	○	0x0005
F0.06	Auxiliary frequency source Y range in superposition	0% to 150%	100%	○	0x0006
F0.07	Frequency source operation selection	LED ones: Frequency source selection 0: The primary frequency source 1: The result of primary and secondary operations	0	○	0x0007

Function code	Name	Setting range	Default	Property	Modbus address
		2: Switch between primary frequency source and secondary frequency source 3: Switch between the primary frequency source and the primary and secondary operation results 4: Switch between auxiliary frequency source and primary and secondary operation results LED ten: Frequency source main and auxiliary operation relationship 0: Primary + secondary 1: Primary to secondary 2: Indicates the maximum value of both 3: The minimum value of both 4: Main*auxiliary			
F0.08	Keyboard setting frequency	0.00Hz to Maximum frequency F0.10	50.00Hz	○	0x0008
F0.09	Running direction selection	0: The same direction 1: The direction is reversed 2: Reverse prohibition	0	○	0x0009
F0.10	Maximum output frequency	0.00Hz to 320.00Hz	50.00Hz	●	0x000A
F0.11	Source of frequency upper limit	0: The number is given F0.12 1: AI1 2: AI2 3: AI3 4: Set the terminal PULSE 5: Communication setting 6: Reservations 7: Keyboard potentiometer set	0	●	0x000B
F0.12	Upper limiting frequency	F0.14 to F0.10	50.00Hz	○	0x000C
F0.13	Upper frequency bias	0.00Hz to F0.10	0.00Hz	○	0x000D
F0.14	Lower frequency	0.00Hz to F0.12	0.00Hz	○	0x000E
F0.15	Lower frequency operating mode	0: Run at lower frequency 1: STOP 2: Zero speed operation	0	○	0x000F
F0.16	Carrier frequency	0.5kHz to 16.0kHz	Model determina	○	0x0010

Function code	Name	Setting range	Default	Property	Modbus address
			tion		
F0.17	Carrier PWM characteristic selection	Bits: Select PWM mode 0: Automatic switching; 1: 7 waves; 2: 5 waves; 3: SPWM; LED ten: Carrier is associated with the output frequency 0: Independent of output frequency 1: It depends on the output frequency LED hundred: random PWM depth 0: OFF 1-8: Open, adjust depth LED kilobit: Over modulation option 0: OFF 1: ON	1010	●	0x0011
F0.18	Acceleration time 1	0.0s to 6500.0s	Model determination	○	0x0012
F0.19	Deceleration time1	0.0s to 6500.0s	Model determination	○	0x0013
F0.20	Parameter initialization	0: No action is taken 1: Restore factory value (Do not restore motor parameters) 2: Clear the record information 3: Restore factory value (Restore motor parameters)	0	●	0x0014
F0.23	Unit of acceleration and deceleration time	0: 1 s 1: 0.1s 2: 01s	1	●	0x0017
F0.24	Acceleration and deceleration time reference frequency	0: Maximum frequency (F0.10) 1: Set the frequency 2: 100 Hz	0	●	0x0018
F0.25	Fan control	Bits: Start/stop control 0: The fan runs after the inverter is powered on 1: Shutdown is related to temperature, and operation is running 2: Stop The fan stops, and the operation is	01	○	0x0019

Function code	Name	Setting range	Default	Property	Modbus address
		related to temperature Tens place: Enables the speed adjustment function 0: Off 1: Enable			
F0.26	Frequency command decimal point	1: 1 decimal place 2: 2 decimal places	2	●	0x001A
F0.27	Modulation ratio coefficient	10.0-150.0%	100.0%	○	0x001B
F1 Start stop control parameter group					
F1.00	Start-up operation mode	LED bits: Boot mode 0: Start directly from the start frequency 1: Start after speed tracking and direction judgment 2: The asynchronous machine starts with pre-excitation	00	●	0x0100
F1.01	Speed tracking mode	LED ten: Speed tracking direction 0: One to the stop direction 1: One to the starting direction 2: Automatic search	0	●	0x0101
F1.02	Speed tracking time	0.01 to 60.00s	1.00s	○	0x0102
F1.03	Speed tracking current loop gain	0.00 to 100.00	10.00	○	0x0103
F1.04	RPM tracking speed gain	0.01 to 10.00	2.00	○	0x0104
F1.05	Speed tracking current	50 to 200%	150%	○	0x0105
F1.06	Starting frequency	0.00 to 60.00Hz	0.00Hz	○	0x0106
F1.07	Startup frequency duration	0.0 to 50.0s	0.0s	●	0x0107
F1.08	Braking current before starting	0.0 to 150.0%	80.0%	●	0x0108
F1.09	Braking time before starting	0.0 to 60.0s	0.0s	●	0x0109
F1.10	Stop method	0: Slow down and stop 1: Free shutdown	0	○	0x010A
F1.11	Stop DC braking start frequency	0.00Hz to F0.10	0.00Hz	○	0x010B

Function code	Name	Setting range	Default	Property	Modbus address
F1.12	Stop DC braking wait time	0.0s to 100.0s	0.0s	○	0x010C
F1.13	Stop DC braking current	0.0% to 150.0%	80.0%	○	0x010D
F1.14	Stop DC braking duration	0.0s to 100.0s	0.0s	○	0x010E
F1.16	Energy consumption brake action voltage	115.0%-140.0%	Model determination	●	0x0110
F1.17	Magnetic flux braking gain	10 to 500%	100%	○	0x0111
F1.18	Magnetic flux braking operating voltage	110% to 150%	Model determination	○	0x0112
F1.19	Flux brake limiting	0 to 200%	20%	○	0x0113
F1.20	Acceleration and deceleration selection	0: Straight line 1: S curve	0	●	0x0114
F1.21	S-curve initial acceleration rate	20.0% to 100.0%	50.0%	●	0x0115
F1.22	S-curve initial deceleration rate	20.0% to 100.0%	50.0%	●	0x0116
F1.23	Zero speed holding torque	0.0 to 150.0%	50.0%	●	0x0117
F1.24	Zero speed holding torque time	0.0 to 6000.0s If the value is set to 6000.0s, the value remains unchanged without time limit.	Model determination	●	0x0118
F1.25	Start pre-excitation time	0.00 to 60.00s	0.20	○	0x0119
F1.26	Shutdown frequency	0.00 to 60.00Hz	0.00Hz	○	0x011A
F1.27	Power failure restart action selection	0: Invalid 1: Valid	0	○	0x011B
F1.28	Power failure restart waiting time	0.00 to 120.00s	0.50s	○	0x011C
F1.29	Select the terminal running protection	LED bits: Select the terminal run instruction when powering on 0: The terminal running instruction is	11	○	0x011D

Function code	Name	Setting range	Default	Property	Modbus address
		invalid during power-on. 1: Terminal running instructions are valid during power-on LED ten: Run command given channel switch terminal run instruction selection 0: The terminal running instruction is invalid 1: The terminal instruction is valid when the terminal is cut in.			
F2 Motor parameter group					
F2.00	Motor type	0: Asynchronous machine (AM) 1: Permanent magnet synchronous motor(PM) 2: Single-phase induction motor (VF control only)	0	●	0x0200
F2.01	Rated power of motor	0.1kW to 400.0kW	Model determination	●	0x0201
F2.02	Rated voltage of motor	1V to 480V		●	0x0202
F2.03	Rated current of motor	0.1 to 2000.0A		●	0x0203
F2.04	Rated frequency of motor	0.01Hz to F0.10		●	0x0204
F2.05	Rated motor speed	1rpm to 65000rpm		●	0x0205
F2.06	Motor stator resistance	0.001 to 65.000		●	0x0206
F2.07	Motor rotor resistance	0.001 to 65.000		●	0x0207
F2.08	Motor fixed rotor inductance	0.1 to 6500.0mH		●	0x0208
F2.09	Mutual inductance of motor fixed rotor	0.1 to 6500.0mH		●	0x0209
F2.10	Motor no-load current	0.1 to 650.0A		●	0x020A
F2.11	Tuning selection	0: No operation is performed 1: Static tuning 1 2: Full tuning 3: Static tuning 2(AM calculated Lm)	0	●	0x020B

Function code	Name	Setting range	Default	Property	Modbus address
F2.12	G/P model	0: Type G machine 1: P-type machine	Model determination	◎	0x020C
F2.13	Single-phase motor turns ratio	10 to 200%	100%	●	0x020D
F2.14	Current calibration coefficient of single-phase motor	50 to 200%	120%	●	0x020E
F2.15	Number of motor poles	2 to 48	4	●	0x020F
F2.16	Speed feedback or encoder type	Units place: encoder type 0: Expansion interface for IO module 1: Standard ABZ encoder 2: Resolver 3: UVW encoder 4: UVW encoder with reduced wiring Tens place: encoder Direction 0: Direction same 1: Direction opposite Hundreds place: break Detection 0: Disable 1: Enable Thousands Digit: Reserved	0	●	0x0210
F2.17	Photoelectric encoder line count	0 to 60000	2500	●	0x0211
F2.18	PG disconnection detection time	0.000 to 60.000s	0.100sec	○	0x0212
F2.19	Resolver pole pairs	2 to 128	2	●	0x0213
F2.20	Encoder installation reduction ratio	0.100 to 50.000	1.000	●	0x0214
F2.21	Encoder filter time	1 to 1000ms	10ms	●	0x0215
F2.22	Stator resistance of synchronization	0.001 to 65.000 (0.0010hm)	Model determination	●	0x0216
F2.23	Synchronize d-axis inductance	0.01mH to 655.35mH		●	0x0217
F2.24	Synchronize Q-axis inductance	0.01mH to 655.35mH		●	0x0218
F2.25	Synchronize back electromotive force	0.1V to 1000.0V		○	0x0219

Function code	Name	Setting range	Default	Property	Modbus address
F2.28	High frequency injection voltage	0.1% to 100.0%	20.0%	●	0x021C
F2.29	Back potential identification current	0.1% to 100.0%	50.0%	●	0x021D
F2.30	Synchronous machine IAE pulse	Thousands place: Deviation 0.15 degrees Hundreds place: Number of IAE transmitted waves, minimum 1 Tens place: IAE width	120	●	0x021E
F2.31	Asynchronous no-load current per unit value	0.1%	Model determination	●	0x021F
F2.32	Per unit asynchronous stator resistance	0.01%		●	0x0220
F2.33	Asynchronous rotor resistance per unit value	0.01%		●	0x0221
F2.34	Asynchronous mutual inductance per unit value	0.1%		●	0x0222
F2.35	Asynchronous leakage sensing per unit value	0.01%		●	0x0223
F2.36	Per unit value of asynchronous leakage sensing coefficient	0.01%		●	0x0224
F2.37	Synchronous stator resistance per unit value	0.01%		●	0x0225
F2.38	Per unit value of synchronous D-axis inductance	0.01%		●	0x0226
F2.39	Synchronous Q-axis inductance per unit value	0.01%		●	0x0227
F2.40	Back electromotive force of synchronous motor	0.1V	300.0V	●	0x0228

Function code	Name	Setting range	Default	Property	Modbus address
F2.41	Encoder mounting angle	0.1 °	0.0 °	●	
F3 Vector control parameter group					
F3.00	ASR (Speed loop) proportional gain 1	0.00 to 100.00%	20%	○	0x0300
F3.01	ASR (Velocity ring) integration time 1	0.01s to 10.00s	0.20	○	0x0301
F3.02	Loss of velocity protection value	0 to 5000ms (0 Turn off stall protection)	0ms	○	0x0302
F3.03	ASR filtering time 1	0.000 to 0.100s	0.000s	○	0x0303
F3.04	ASR switching frequency 1	0.00 to 50.00Hz	5.00Hz	○	0x0304
F3.05	ASR (Speed loop) proportional gain 2	0.00 to 100.00%	20%	○	0x0305
F3.06	ASR (Velocity loop) integration time 2	0.01s to 10.00s	0.30	○	0x0306
F3.08	ASR filtering time 2	0.000 to 0.100s	0.000s	○	0x0308
F3.09	ASR switching frequency 2	0.00 to 50.00Hz	10.00Hz	●	0x0309
F3.10	Slip compensation coefficient	0 to 250%	100%	●	0x030A
F3.11	Maximum electric torque	0.0 to 250.0%	160.0%	○	0x030B
F3.12	Maximum generating torque	0.0 to 250.0%	160.0%	○	0x030C
F3.16	Current loop D axis proportional gain	0.1 to 10.0	1.0	●	0x0310
F3.17	Current loop D axis integral gain	0.1 to 10.0	1.0	○	0x0311
F3.18	Current loop Q axis proportional gain	0.1 to 10.0	1.0	○	0x0312
F3.19	Current loop Q axis integral gain	0.1 to 10.0	1.0	○	0x0313
F3.20	D-axis feed-forward gain	0.0 to 200.0%	50.0%	○	0x0314
F3.21	Q-axis feed-forward gain	0.0 to 200.0%	50.0%	○	0x0315

Function code	Name	Setting range	Default	Property	Modbus address
F3.22	Optimize the current loop bandwidth	0.0 to 99.99ms	2.00ms	○	0x0316
F3.23	Current loop control word	0 to 65535	0	○	0x0317
F3.24	Weak magnetic control current upper limit	0 to 200%	50%	●	0x0318
F3.25	Weak magnetic control feed forward gain	0 to 500%	0%	●	0x0319
F3.26	Weak magnetic control proportional gain	0 to 9999	500	○	0x031A
F3.27	Weak magnetic control integral gain	0 to 9999	1000	○	0x031B
F3.28	MTPA gain	0.0 to 500.0%	0.0%	○	0x031C
F3.29	MTPA filtering time	0.0 to 999.9ms	100.0ms	○	0x031D
F3.30	Magnetic flux compensation coefficient	0 to 500%	100%	○	0x031E
F3.31	Open-loop vector observer gain	0 to 9999	1024	○	0x031F
F3.32	Open loop vector observation filtering time	1 to 100ms	20ms	○	0x0320
F3.33	The open-loop vector compensates the starting frequency	0 to 100.0%	1.0%	○	0x0321
F3.34	Open loop vector control word	0 to 9999	4	○	0x0322
F3.35	Synchronous open loop start mode	0: Direct startup. 1: Start at an Angle	0	○	0x0323
F3.36	Dc pull in time	1ms to 9999ms	500ms	○	0x0324
F3.37	Synchronous open loop vector low frequency boost	0 to 100.0%	20.0%	○	0x0325
F3.38	Synchronous open	0.0 to 100.0%	0.0%	○	0x0326

Function code	Name	Setting range	Default	Property	Modbus address
	loop vector high frequency boost				
F3.39	Low frequency boost to maintain frequency	0.0 to 100.0%	10.0%	○	0x0327
F3.40	Low frequency increases cutoff frequency	0.0 to 100.0%	20.0%	○	0x0328
F3.46	Speed/torque control mode	0: Speed control 1: Torque control	0	●	0x032E
F3.47	Torque given channel selection	0: F3.48 is set 1: AI1╳F3.48 2: AI2╳F3.48 3: AI3╳F3.48 4: PUL╳F3.48 5: Keyboard potentiometer given ╳F7.01 6: RS485 communication given ╳F3.48	0	●	0x032F
F3.48	Torque keyboard numeric setting	0 to 200.0%	100.0%	○	0x0330
F3.49	Torque direction selection	Units: Torque direction setting 0: The torque direction is positive 1: The torque direction is negative Tens place: torque reversing setting 0: Torque reversal is allowed 1: Torque reversal is prohibited	00	○	0x0331
F3.50	Upper limit of output torque	F3.51 to 200.0%	150.0%	○	0x0332
F3.51	Lower limit of output torque	0 to F3.50	0%	○	0x0333
F3.52	Torque control forward speed limit selection	0: F3.54 is set 1: AI1╳F3.54 2: AI2╳F3.54 3: AI3╳F3.54 4: PUL╳F3.54 5: Keyboard potentiometer given ╳F3.54 6: RS485 communication given ╳F3.54	0s	○	0x0334

Function code	Name	Setting range	Default	Property	Modbus address
F3.53	Torque control reversal speed limit selection	0: F3.55 is set 1: AI1×F3.55 2: AI2×F3.55 3: AI3×F3.55 4: PUL×F3.55 5: Keyboard potentiometer given ×F3.55 6: RS485 communication given ×F3.55 7: Purchase card	0	○	0x0335
F3.54	Torque control positive maximum speed limit	0.00 to upper limiting frequency	50.00Hz	○	0x0336
F3.55	Torque control reversal maximum speed limit	0.00 to upper limiting frequency	50.00Hz	○	0x0337
F3.56	Speed/torque switching delay	0.00 to 10.00s	0.01s	○	0x0338
F3.57	Torque acceleration time	0.00 to 10.00s	0.01s	○	0x0339
F3.58	Torque deceleration time	0.00 to 10.00s	0.01s	○	0x033A
F3.59	Forward and reverse torque dead zone time	0.00 to 650.00s	0.00s	○	0x033B
F4 V/F control parameter group					
F4.00	Linear VF curve selection	0: Linear V/F curve; 1: Multi-point V/F curve 2: Square V/F curve 3-11: 1.1-1.9 power VF curves, respectively; 12: V/F fully separated mode	0	●	0x0400
F4.01	Manual torque lift	0.1 to 30.0%, 0 automatic torque boost	Model determination	○	0x0401
F4.02	Torque boost cutoff frequency	0.00Hz to F0.10	50.00Hz	●	0x0402
F4.03	Self-set frequency F1	0.00Hz to F4.05	3.00Hz	●	0x0403
F4.04	Self-set voltage V1	0.0% to 100.0%	10.0%	●	0x0404
F4.05	Self-set frequency F2	F4.03 to F4.07	5.00Hz	●	0x0405

Function code	Name	Setting range	Default	Property	Modbus address
F4.06	Self-set voltage V2	0.0% to 100.0%	15.0%	●	0x0406
F4.07	Self-set frequency F3	F4.05 to F4.09	8.00Hz	●	0x0407
F4.08	Self-set voltage V3	0.0% to 100.0%	22.0%	●	0x0408
F4.09	Self-set frequency F4	F4.07-Rated frequency of motor F2.04	12.00Hz	●	0x0409
F4.10	Self-set voltage V4	0.0% to 100.0%	31.0%	●	0x040A
F4.11	Oscillation suppression gain	0.0 to 10.0	Model determination	○	0x040B
F4.12	Oscillation suppression filtering time	1 to 1000ms	50ms	○	0x040C
F4.14	Percentage of output voltage	25 to 100%	100%	●	0x040E
F4.16	AVR function	0: Invalid 1: Only slowing down is not effective 2: Only constant speed is effective 3: Valid	3	●	0x0410
F4.17	EVF torque boost gain	0 to 500.0%	50.0%	○	0x0411
F4.18	EVF torque boost filtering time	1 to 1000ms	20ms	○	0x0412
F4.19	EVF slip compensation gain	0 to 500.0%	0.0%	○	0x0413
F4.20	EVF slip compensation filtering time	1 to 1000ms	100ms	○	0x0414
F4.21	Automatic energy saving selection	Units bit: 0 is off, 1 is on Tens: Frequency change exit depth Hundreds place: Reserve Thousands: Reserve	50	○	0x0415
F4.22	Lower limit frequency of energy saving operation	0.0 to 100.0%	25.0%	○	0x0416
F4.23	Energy saving and pressure reduction time	0.1 to 5000.0s	10.0s	○	0x0417

Function code	Name	Setting range	Default	Property	Modbus address
F4.24	Lower limit of energy saving and pressure reduction	20.0 to 100.0%	30.0%	○	0x0418
F4.25	Energy saving and pressure reduction rate	1 to 1000V/s	50V/sec	○	0x0419
F4.26	Voltage regulated proportional gain	0 to 100	20	○	0x041A
F4.27	Voltage regulation integral gain	0 to 100	20	○	0x041B
F4.30	Stabilizer proportional gain	0.1% to 100.0%	10.0%	○	0x041E
F4.31	Stabilizer filtering time	1ms to 1000ms	50ms	○	0x041F
F4.32	Low frequency current lift	0.0% to 200.0%	100.0%	○	0x0420
F4.33	Low frequency boost maintenance frequency	0 to 100.0%	10.0%	○	0x0421
F4.34	Low frequency current boosts the cutoff frequency	0 to 100.0%	30.0%	○	0x0422
F4.35	D-axis current gain	0.0 to 100.0	2.0	○	0x0423
F4.36	Q-axis current gain	0.0 to 100.0	2.0	○	0x0424
F4.37	Magnetic flux set strength	0 to 500%	30%	○	0x0425
F4.38	Magnetic flux control proportional gain	0 to 9999	500	○	0x0426
F4.39	Magnetic flux controls the integral gain	0 to 9999	500	○	0x0427
F4.40	Dc pull in time	1ms to 9999ms	1000ms	○	0x0428
F4.41	Starting frequency	0.00Hz to 99.00Hz	3.00Hz	○	0x0429

Function code	Name	Setting range	Default	Property	Modbus address
F4.42	Starting frequency time	0.0s to 999.0s	3.0s	○	0x042A
F4.43	V/F Separate the output voltage source	0: Function code F0.27 set 1: AI1 is set 2: AI2 is set 3: Reservations 4: Set the terminal PULSE 5: Multi-speed 6: Simple PLC 7: PID 8: Communication is given 100% corresponding to the rated voltage of the motor	0	○	0x042B
F4.44	V/F separation output voltage digital setting	0.0% to 100.0%	0	○	0x042C
F4.45	V/F separation voltage rise time	0.0 to 1000.0s	1.0	○	0x042D
F4.46	V/F separation voltage drop time	0.0 to 1000.0s	1.0	○	0x042E
F4.47	V/F separate stop mode	0: The voltage/frequency is simultaneously reduced to 0; 1: The frequency decreases after the voltage drops to 0	0	○	0x042F

Function code	Name	Setting range	Default	Property	Modbus address
F5 Enter the terminal parameter group					
F5.00	DI1 Terminal function selection	0: Non-function 0: Non-function 1: FWD 2: REV 3: Three-wire operation control 4: FJOG 5: RJOG 6: Terminal UP 7: Terminal DOWN 8: Free break 9: RESET 10: Running pause 11: External fault input(NO) 12: Multi-speed instruction terminal 1 13: Multi-speed instruction terminal 2 14: Multi-speed instruction terminal 3 15: Multi-speed instruction terminal 4 16: Acceleration and deceleration time select terminal 1 17: Acceleration and deceleration time select terminal 2 18: Frequency source switching (terminal, keyboard) 19: The UP/DOWN setting clears zero 20: Run the command to switch terminals 21: Acceleration and deceleration prohibition 22: PID pause 23: PLC State reset 24: Swing pause 25: Counter input 26: Counter reset 27: Length count input 28: Length reset 29: Torque control prohibited 30: PULSE impulse input(only DI4) 31: Reverse 32: Immediate DC braking 33: The external fault is normally closed 34: Reverse 35: The direction of PID action is reversed	1	●	0x0500
F5.01	DI2 Terminal function selection		2	●	0x0501
F5.02	DI3 Terminal function selection		9	●	0x0502
F5.03	DI4 Terminal function selection		12	●	0x0503
F5.04	DI5 Terminal function selection (Extension)		0	●	0x0504
F5.05	DI6 Terminal function selection (Extension)		0	●	0x0505
F5.08	AI1 Indicates the DI terminal function		0	●	0x0508
F5.09	AI2 Indicates the DI terminal function		0	●	0x0509

Function code	Name	Setting range	Default	Property	Modbus address
		36: External parking terminal 1 37: Control command switching terminal 38: PID integration pause terminal 39: Main frequency source and preset frequency switching terminal 40: Auxiliary frequency source and preset frequency switching terminal 41: Retain 42: Retain 43: PID parameter switching terminal 44: User-defined fault 1 45: User-defined fault 2 46: Speed control/torque control switch 47: Emergency stop 48: External parking terminal 2 49: Decelerate DC braking 50: The running time is cleared 51: Timing enable 52: Timing reset			
F5.10	AI1 Input selection	0: 0 to 10V 3: 0 to 5V 4: 0.5-4.5V	0	●	0x050A
F5.11	AI2 Input selection	0: 0 to 10V 1: 4 to 20mA 2: 0 to 20mA 3: 0 to 5V 4: 0.5 to 4.5V	1	●	0x050B
F5.12	VDI1 terminal function selection	0: Non-function 1: FWD 2: REV 3: Three-wire operation control 4: FJOG 5: RJOG 6: Terminal UP 7: terminal DOWN 8: Free break 9: RESET 10: Running pause 11: External fault input(NO) 12: Multi-speed instruction terminal 1 13: Multi-speed instruction terminal 2	0	●	0x050C
F5.13	VDI2 terminal function selection		0	●	0x050D
F5.14	VDI3 terminal function selection		0	●	0x050E

Function code	Name	Setting range	Default	Property	Modbus address
		14: Multi-speed instruction terminal 3 15: Multi-speed instruction terminal 4 16: Acceleration and deceleration time select terminal 1 17: Acceleration and deceleration time select terminal 2 18: Frequency source switching (terminal, keyboard) 19: The UP/DOWN setting clears zero 20: Run the command to switch terminals 21: Acceleration and deceleration prohibition 22: PID pause 23: PLC State reset 24: Swing pause 25: Counter input 26: Counter reset 27: Length count input 28: Length reset 29: Torque control prohibited 30: PULSE impulse input(only DI4) 31: Reverse 32: Immediate DC braking 33: The external fault is normally closed 34: Reverse 35: The direction of PID action is reversed 36: External parking terminal 1 37: Control command switching terminal 38: PID integration pause terminal 39: Main frequency source and preset frequency switching terminal 40: Auxiliary frequency source and preset frequency switching terminal 41: Reverse 42: Reverse 43: PID parameter switching terminal 44: User-defined fault 1 45: User-defined fault 2 46: Speed control/torque control switch 47: Emergency stop 48: External parking terminal 2 49: Decelerate DC braking			

Function code	Name	Setting range	Default	Property	Modbus address
		50: The running time is cleared 51: Timing enable 52: Timing reset			
F5.15	DI filtering time	0.000s to 1.000s	0.010s	○	0x050F
F5.16	Terminal command mode	0: Two-wire type 1 1: Two-wire type 2 2: Three-wire type 1 3: Three-wire type 2	0	●	0x0510
F5.17	UP/DOWN change rate	0.01Hz to 655.35Hz	0.50Hz	○	0x0511
F5.18	AI1 minimum input	0.00V to F5.20	0.00V	○	0x0512
F5.19	AI1 minimum input setting	-100.0% to +100.0%	0%	○	0x0513
F5.20	AI1 maximum input	F5.18 to +10.00V	10.00V	○	0x0514
F5.21	AI1 maximum input setting	-100.0% to +100.0%	100.0%	○	0x0515
F5.22	AI1 filtering time	0.00s to 10.00s	0.10s	○	0x0516
F5.23	AI2 minimum input	-10.00V to F5.25	2.00V	○	0x0517
F5.24	AI2 minimum input setting	-100.0% to +100.0%	0%	○	0x0518
F5.25	AI2 maximum input	F5.23 to +10.00V	10.00V	○	0x0519
F5.26	AI2 maximum input setting	-100.0% to +100.0%	100.0%	○	0x051A
F5.27	AI2 filtering time	0.00s to 10.00s	0.10s	○	0x051B
F5.28	PULSE	0.00 to F5.30	0.00kHz	○	0x051C
F5.29	PULSE input minimum frequency setting	0.00 to 100.00%	0%	○	0x051D
F5.30	PULSE input maximum frequency	F5.28 to 50.00kHz	20.00kHz	○	0x051E
F5.31	PULSE maximum frequency setting	0.00 to 100.00%	100.0%	○	0x051F
F5.32	PULSE filtering time	0.00 to 10.00s	0.10s	○	0x0520
F5.33	DI1 Enable delay time	0.0s to 360.0s	0.0s	○	0x0521
F5.34	DI2 Enable delay time	0.0s to 360.0s	0.0s	○	0x0522

Function code	Name	Setting range	Default	Property	Modbus address
F5.35	DI1 Forbidden delay time	0.0s to 360.0s	0.0s	○	0x0523
F5.36	DI2 Forbidden delay time	0.0s to 360.0s	0.0s	○	0x0524
F5.37	Enter terminal valid status setting 1	0: Low level valid 1: High level valid LED one place: D1 terminal LED tens place: D2 terminal LED hundreds place: D3 terminal LED thousands place: D4 terminal	0	●	0x0525
F5.38	Enter terminal valid status setting 2	0: Low level valid 1: High level valid LED one place: D5 terminal(expend) LED tens place: D6 terminal(expend)	0	●	0x0526
F5.39	Enter terminal valid status setting 3	0: Low level valid 1: High level valid LED one place: AI1 LED tens place: AI2 LED hundreds place: AI3(expend)	0	●	0x0527
F5.40	Analog input curve selection	One place: AI1 Tens place: AI2 Hundreds place: AI3 (expend) 0: Straight line (default) 1: Curve 1 2: Curve 2	0	●	0x0528
F5.41	Lower limit of curve 1	0.00 to F5.43	0.00V	○	0x0529
F5.42	The lower limit of curve 1 is set accordingly	0.00 to 100.00%	0.0%	○	0x052A
F5.43	Curve 1 inflection point 1 Input voltage	F5.41 to F5.45	3.00V	○	0x052B
F5.44	Curve 1 inflection point 1 corresponds to the setting	0.00 to 100.00%	30.0%	○	0x052C
F5.45	Curve 1 inflection point 2 Input voltage	F5.43 to F5.47	6.00V	○	0x052D

Function code	Name	Setting range	Default	Property	Modbus address
F5.46	Curve 1 inflection point 2 corresponds to the setting	0.00 to 100.00%	60.0%	○	0x052E
F5.47	Upper limit of curve 1	F5.45 to 10.00V	10.0V	○	0x052F
F5.48	The upper limit of curve 1 is set accordingly	0.00 to 100.00%	100.0%	○	0x0530
F5.49	Lower limit of curve 2	0.00 to F5.51	0.00V	○	0x0531
F5.50	The lower limit of curve 2 is set accordingly	0.00 to 100.00%	0.0%	○	0x0532
F5.51	Curve 2 Inflection point 1 Input voltage	F5.49 to F5.53	3.00V	○	0x0533
F5.52	Curve 2 inflection point 1 corresponds to the setting	0.00 to 100.00%	30.0%	○	0x0534
F5.53	Curve 2 Inflection point 2 Input voltage	F5.51 to F5.55	6.00V	○	0x0535
F5.54	Curve 2 inflection point 2 corresponds to the setting	0.00 to 100.00%	60.0%	○	0x0536
F5.55	Upper limit of curve 2	F5.53 to 10.00V	10.00V	○	0x0537
F5.56	The upper limit of curve 2 is set accordingly	0.00 to 100.00%	100.0%	○	0x0538
F5.57	AI3(Extension) is used to select the DI terminal function	0: Non-function 1: FWD 2: REV 3: Three-wire operation control 4: FJOG 5: RJOG 6: Terminal UP 7: terminal DOWN 8: Free break 9: RESET 10: Running pause		○	0x0539
F5.58	AI4 (Extension) is used to select the DI terminal function				0x053A

Function code	Name	Setting range	Default	Property	Modbus address
		11: External fault input(NO) 12: Multi-speed instruction terminal 1 13: Multi-speed instruction terminal 2 14: Multi-speed instruction terminal 3 15: Multi-speed instruction terminal 4 16: Acceleration and deceleration time select terminal 1 17: Acceleration and deceleration time select terminal 2 18: Frequency source switching (terminal, keyboard) 19: The UP/DOWN setting clears zero 20: Run the command to switch terminals 21: Acceleration and deceleration prohibition 22: PID pause 23: PLC State reset 24: Swing pause 25: Counter input 26: Counter reset 27: Length count input 28: Length reset 29: Torque control prohibited 30: PULSE impulse input(only DI4) 31: Retain 32: Immediate DC braking 33: The external fault is normally closed 34: Retain 35: The direction of PID action is reversed 36: External parking terminal 1 37: Control command switching terminal 38: PID integration pause terminal 39: Main frequency source and preset frequency switching terminal 40: Auxiliary frequency source and preset frequency switching terminal 41: Retain 42: Retain 43: PID parameter switching terminal 44: User-defined fault 1 45: User-defined fault 2 46: Speed control/torque control switch 47: Emergency stop 48: External parking terminal 2 49: Decelerate DC braking 50: The running time is cleared 51: Timing enable 52: Timing reset			

Function code	Name	Setting range	Default	Property	Modbus address
F5.59	AI3(Extension) Input selection	0: 0 to 10V 1: 4 to 20mA 2: 0 to 20mA 3: 0 to 5V 4: 0.5 to 4.5V	0		0x053B
F5.60	AI4(Extension) Input selection	0: 0 to 10V 1: 4 to 20mA 2: 0 to 20mA 3: 0 to 5V 4: 0.5 to 4.5V	0		0x053C
F5.61	AI3(Extended) lower limit	0 to F5.63	0.00V	○	0x053D
F5.62	AI3(Extended) lower limit is set accordingly	-100.0% to +100.0%	0.00%	○	0x053E
F5.63	AI3(Extended) upper limit	F5.61 to +10.00V	10.00V	○	0x053F
F5.64	The AI3(Extended) upper limit corresponds to the setting	-100.0% to +100.0%	100.00%	○	0x0540
F5.65	AI3(Extended) filtering time	0.00 to 10.00s	0.10s	○	0x0542
F5.66	AI4(Extended) lower limit	0 to F5.68	0.00V	○	0x0543
F5.67	AI4(Extended) lower limit is set accordingly	F5.66 to +10.00V	0.00V	○	0x0544
F5.68	AI4(Extended) upper limit	F5.66 to +10.00V	10.00V	○	0x0546
F5.69	AI4(Extended) upper limit	-100.0% to +100.0%	100.00%	○	0x0546
F5.70	AI4(Extended) filtering time	0.00 to 10.00s	0.10s	○	0x0547

Function code	Name	Setting range	Default	Property	Modbus address
F5.71	vX terminal valid state source	0: Internal connection with virtual vYn 1: Whether the function code setting is valid. One place: Virtual VDI1 Tens place: Virtual VDI2 Hundred bit: Virtual VDI3 Thousands: Reserved	0	○	0x0548
F5.72	Virtual vX terminal function code set valid status	0: Invalid; 1: Valid Units bit: Virtual VDI1 Tens place: Virtual VDI2 Hundreds place: Virtual VDI3 Thousands place: Reserved	0	○	0x0549
F5.73	Select the terminal action mode	LED one place: free shutdown terminal recovery mode 0: Restore the original command after it is invalid 1: The original instruction is not restored if invalid LED tens place: emergency stop terminal recovery mode 0: Restore the original command after disconnection 1: The original command is not restored after the disconnect LED hundreds place: Select terminal operation mode after fault reset 0: The terminal control can be started directly 1: Stop the terminal control before starting LED thousands place: Reserve	111	○	0x054A

Function code	Name	Setting range	Default	Property	Modbus address
F6 Output terminal parameter group					
F6.00	FM terminal output selection	0: Pulse output 1: Open collector output (FMR)	1	○	0x0600
F6.01	FMR open collector output selection	0: No output 1: The inverter is in operation 2: Fault output (Fault shutdown) 3: Frequency level detection FDT1 Output 4: Frequency reaches 5: Zero speed running 1 6: Motor overload forecast alarm 7: Inverter overload forecast alarm 8: Set meter value reached 9: The specified count value is reached 10: Length reached 11: The PLC cycle is complete 12: The accumulated running time reaches 13: Reservations 14: Torque limit 15: Ready to run 16: AI1 > AI2 17: The upper frequency reaches 18: The lower limit frequency reaches 1 19: Output in undervoltage state 20: Communication control 21: Positioning completed (reserved) 22: Positioning close (reserved) 23: Zero speed running 2 24: The cumulative power-on time reaches 25: Frequency level detection FDT2 output 26: Frequency reaches 1 output 27: Frequency reaches 2 output 28: Current reaches 1 output 29: Current reaches 2 output 30: timed to reach output 31: Reserved 32: Reserved 33: Running direction 34: Reserved 35: The module temperature reaches 36: Reserved 37: The lower limit frequency reaches 2 38: Fault output 2	0	○	0x0601
F6.02	Relay 1 output selection		2	○	0x0602
F6.03	Relay 2 output selection (Extended)		0	○	0x0603
F6.06	VDO1 output selection		0	●	0x0606
F6.07	VDO2 output selection		0	●	0x0607
F6.08	VDO3 output selection		0	●	0x0608
F6.09	Reserve			-	0x0609

Function code	Name	Setting range	Default	Property	Modbus address
		39: Reserved 40: The running time arrives 41: User-defined output 1 42: User-defined output 2 43: Timer output 44: Running forward 45: Reverse running			
F6.10	AO Output signal selection	One place: AO1 0: 0 to 10V 1: 4.00 to 20.00mA 2: 0.00 to 20.00mA Tens place: AO2 (expend) 0: 0 to 10V 1: 4.00 to 20.00mA 2: 0.00 to 20.00mA	00	-	0x060A
F6.11	FMP (Pulse output terminal) output selection	0: Run frequency 1: Setting frequency 2: Output current 3: Output torque 4: Output power 5: Output voltage 6: Reserve 7: AI1 8: AI2 9: AI3(Expansion module) 10: PULSE input value 11: Reserve 12: Communication setting 13: Motor speed 14: Output current (0-1000A, corresponding to 0-10V) 15: Output voltage (0-1000V, corresponding to 0-10V) 16: Bus voltage (0-1000V, corresponding to 0-10V)	0	○	0x060B
F6.12	AO1 Output selection		0	○	0x060C
F6.13	AO2 Output(expend)		0	○	0x060D
F6.14	FM frequency output upper limit	0.00 to 20.00kHz	20.00kHz	○	0x060E
F6.15	AO1 Minimum input	0.00V to F6.17	0.00V	○	0x060F

Function code	Name	Setting range	Default	Property	Modbus address
F6.16	AO1 Minimum input corresponds to setting	0.0% to +100.0%	0.0%	○	0x0610
F6.17	AO1 Maximum output	F6.15 to +10.00V	10.00V	○	0x0611
F6.18	AO1 The maximum output corresponds to the setting	0.0% to +100.0%	100.0%	○	0x0612
F6.19	AO2 Minimum output(expend)	0.00V to F6.21	0.00V	○	0x0613
F6.20	AO2 Minimum output correspondence settings (expend)	0.0% to +100.0%	0.0%	○	0x0614
F6.21	AO2 Maximum output(expend)	F6.19 to +10.00V	10.00V	○	0x0615
F6.22	AO2 Maximum output correspondence settings (expend)	0.0% to +100.0%	100.0%	○	0x0616
F6.23	FMR connecting delay time	0.0s to 3600.0s	0.0s	○	0x0617
F6.24	Relay 1 connecting delay time	0.0 to 3600.0s	0.0s	○	0x0618
F6.25	Relay 2 connecting delay time(expend)	0.0s to 3600.0s	0.0s	○	0x0619
F6.26	VDO connecting delay time	0.0 to 3600.0s	0.0s	○	0x061A
F6.27	FMR disconnect delay time	0.0s to 3600.0s	0.0s	○	0x061B
F6.28	Relay 1 disconnect delay time	0.0 to 3600.0s	0.0s	○	0x061C
F6.29	Relay 2 disconnect delay time(expend)	0.0s to 3600.0s	0.0s	○	0x061D
F6.30	VDO1 disconnect delay	0.0 to 3600.0s	0.0s	○	0x061E

Function code	Name	Setting range	Default	Property	Modbus address
F6.31	Output terminal valid status select 1	0: Positive logic 1: Reverse logic One place: FDOR Tens place: RL1 Hundreds place: RL2 (Extended) Thousands place: -	000	○	0x061F
F6.32	Virtual output terminal valid status Select 2	0: Positive logic 1: Reverse logic One place: VDO1 Tens place: VDO2 Hundreds place: VDO3 Thousands palce: -	000	○	0x0620
F6.33	User-defined output selection (EX) 1	0: The running frequency 1: Set the frequency 2: Bus voltage 3: Output voltage 4: Output current 5: Output power 6: Output torque 7-8: Reserved 9: AI1 input 10: AI2 input 11: AI3 input(expansion module)	0	○	0x0621
F6.34	User selected comparison method 1	Units: Compare test methods 0: Equal to (EX == X1) 1: The value is greater than or equal to 2: Less than or equal to 3: Interval comparison (X1 ≤ EX ≤ X2) 4: Bit test (EX & X1=X2) Tens: output mode 0: False value output 1: Truth output	0	○	0x0622
F6.35	User-defined dead zone 1	0 to 65535	0	○	0x0623
F6.36	User-defined 1 output comparison value 1	0 to 65535	0	○	0x0624
F6.37	User defined 1 output comparison value 2	0 to 65535	0	○	0x0625

Function code	Name	Setting range	Default	Property	Modbus address
F6.38	User-defined output selection (EX) 2	0: The running frequency 1: Set the frequency 2: Bus voltage 3: Output voltage 4: Output current 5: Output power 6: Output torque 7-8: Reserved 9: AI1 input 10: AI2 input 11: AI3 input(Expansion module)	0	○	0x0626
F6.39	User defined comparison method 2	One place: Compare test methods 0: Equal to (EX == X1) 1: The value is greater than or equal to 2: Less than or equal to 3: Interval comparison (X1 ≤ EX ≤ X2) 4: Bit test (EX & X1=X2) Tens: output mode 0: False value output 1: Truth output	0	○	0x0627
F6.40	User-defined dead zone 2	0 to 65535	0	○	0x0628
F6.41	User defined 2 output comparison value 1	0 to 65535	0	○	0x0629
F6.42	User defined 2 output comparison value 2	0 to 65535	0	○	0x062A
F6.43	Timer time unit	0: Second 1: Min 2: Hour	0	○	0x062B
F6.44	Timer maximum	0-65000 (No reset when the set value is 65000)	0	○	0x062C
F6.45	Timer set value	0 to 65000	0	○	0x062D
F6.46	Counter maximum	0 to 65000	0	○	0x062E
F6.47	Counter set value	0 to 65000	0	○	0x062F

Function code	Name	Setting range	Default	Property	Modbus address
F7 Keyboard and display parameter group					
F7.00	LCD Keyboard parameter copy	0: No operation is performed 1: The function parameters of the machine are uploaded to the LCD keyboard 2: LCD keyboard function parameters download to the machine	0	○	0x0700
F7.01	ENT key function selection	0: ENT is invalid. 1: Switch between the instruction channel of the operation panel and the remote instruction channel (the remote instruction channel includes communication and terminal control) 2: Reverse switch 3: Forward jog 4: Reverse jog 5: Menu mode switch 6: Reverse operation	0	●	0x0701
F7.02	Keyboard STOP key range	LED one place: Terminal control selection 0: The terminal instruction is invalid 1: Valid for the terminal command LED tens place: Communication control selection 0: The communication instruction is invalid. 1: Valid for communication instructions LED hundreds place: Reserved LED thousands place: Reserved	0011	○	0x0702
F7.03	Keyboard run displays parameter 1	LED one place: First group display 0: Output frequency 1: Given frequency 2: Bus voltage 3: Output voltage 4: Output current 5: Output power 6: Output torque 7: DI input status 8: DO output status 9: AI1 voltage A: AI2 voltage B: AI3 voltage(expansion module) C: Reserved	E420	○	0x0703

Function code	Name	Setting range	Default	Property	Modbus address
		D: Reserved E: Motor speed F: PID setting LED tens place: second group display LED hundreds place: Third group display LED thousands place: Fourth group display			
F7.04	Keyboard run displays parameter 2	LED one place: First group display 0: Not displayed 1: PID feedback 2: PLC stage 3: PULSE input pulse frequency 4: Feedback speed 5: Reserved 6: Reserved 7: Reserved 8: Reserved 9: Current power-on time A: Current running time B: Reserved C: Communication setting D: Reserved E: Main frequency X display F: Auxiliary frequency Y display LED ten: Second group display LED hundreds place: Third group display LED thousands place: Fourth group display	0000	○	0x0704
F7.05	Keyboard stop displays parameters	LED one place: First group display 0: Output frequency 1: Given frequency 2: Bus voltage 3: Output voltage 4: Output current 5: Output power 6: Output torque 7: DI input status 8: DO output status 9: AI1 voltage A: AI2 voltage B:AI3 voltage(Expansion module) C: Motor speed D: PID setting E: PID feedback F: PLC stage LED tens place: Second group display	C421	○	0x0705

Function code	Name	Setting range	Default	Property	Modbus address
		LED hundreds place: Third group display LED thousands place: Fourth group display			
F7.06	Load speed display factor	0.001 to 65.000	1.000	○	0x0706
F7.07	Radiator temperature of inverter module	0℃- 100℃		◎	0x0707
F7.08	Radiator temperature of rectifier bridge	0℃- 100℃		◎	0x0708
F7.09	Cumulative running time	0h to 65535h		◎	0x0709
F7.10	Product number	-		◎	0x070A
F7.11	Software version	-		◎	0x070B
F7.12	Reverse			◎	0x070C
F7.13	Total power-on time	0 to 65535h		◎	0x070D
F7.14	High cumulative power consumption	Power consumption =F7.14*65535+F7.15 Units: kWh		◎	0x070E
F7.15	Low cumulative power consumption			◎	0x070F
F7.16	Output power correction factor	0 to 100.0%	100.0%	○	0x0710
F7.17	Power display dimension selection	0 to Power display percentage (%) 1 to Power display kilowatts (KW)	1	○	0x0711

Function code	Name	Setting range	Default	Property	Modbus address
F8 Auxiliary function parameter group					
F8.00	JOG running frequency	0.00Hz to Maximum frequency F0.10	2.00Hz	○	0x0800
F8.01	JOG acceleration time	0.00s to 6500.0s	20.0s	○	0x0801
F8.02	JOG deceleration time	0.00s to 6500.0s	20.0s	○	0x0802
F8.03	Acceleration time 2	0.00s to 6500.0s	Model determination	○	0x0803
F8.04	Deceleration time 2	0.00s to 6500.0s		○	0x0804
F8.05	Acceleration time 3	0.00s to 6500.0s		○	0x0805
F8.06	Deceleration time 3	0.00s to 6500.0s		○	0x0806
F8.07	Acceleration time 4	0.00s to 6500.0s		○	0x0807
F8.08	Deceleration time 4	0.00s to 6500.0s		○	0x0808
F8.09	Emergency stop deceleration time	0.00s to 6500.0s		○	0x0809
F8.10	Jump frequency 1	0.00Hz -Maximum frequency	0.00Hz	○	0x080A
F8.11	Jump frequency 2	0.00Hz -Maximum frequency	0.00Hz	○	0x080B
F8.12	Jump frequency amplitude	0.00Hz -Maximum frequency	0.00Hz	○	0x080C
F8.13	Forward-reverse dead zone time	0.0 to 120.0s	0.0s	○	0x080D
F8.14	The carrier frequency is adjusted with temperature	0: Temperature independent 1: Temperature dependent	1	○	0x080E
F8.15	Terminal action is preferred	0: Invalid 1: Valid	1	○	0x080F
F8.16	Setting of accumulated power-on arrive time	0h to 65000h	0h	○	0x0810
F8.17	Set the accumulative running arrival time	0h to 65000h	65000h	○	0x0811
F8.18	Setting of accumulated power-on arrive action	0: Continue to run 1: Fault warning	0	●	0x0812

Function code	Name	Setting range	Default	Property	Modbus address
F8.19	Set the accumulative running time arrival action	0: Continue to run 1: Fault warning	0	●	0x0813
F8.20	Arrival time of this run	0-65000min	0	○	0x0814
F8.21	The running time reaches the action selection	0: Continue to run 1: Fault prompt	0	●	0x0815
F8.22	Frequency detection value(FDT1)	0.00-Maximum frequency	50.00Hz	○	0x0816
F8.23	Frequency detection lag value(FDT1)	0.00 to Maximum frequency	0.00Hz	○	0x0817
F8.24	Frequency detection value(FDT2)	0.00 to Maximum frequency	50.00Hz	○	0x0818
F8.25	Frequency detection lag value(FDT2)	0.00 to Maximum frequency	0.00Hz	○	0x0819
F8.26	Frequency reaches the detect width	0.0% to 100.0% (Maximum frequency)	0.0%	○	0x081A
F8.27	Arbitrary arrival frequency detection value 1	0.00Hz to Maximum frequency	50.00Hz	○	0x081B
F8.28	Arbitrary arrival frequency detection amplitude 1	0.0% to 100.0% (Maximum frequency)	0.0%	○	0x081C
F8.29	Arbitrary arrival frequency detection value 2	0.00Hz to Maximum frequency	50.00Hz	○	0x081D
F8.30	Arbitrary arrival frequency detection amplitude 1	0.0% to 100.0% (Maximum frequency)	0.0%	○	0x081E
F8.31	Arbitrarily reach current1	0.0% to 300.0% (Motor rated current)	100.0%	○	0x081F
F8.32	Arbitrarily reach current 1 width	0.0% to 300.0% (Motor rated current)	0.0%	○	0x0820
F8.33	Arbitrarily reach current 2	0.0% to 300.0% (Motor rated current)	100.0%	○	0x0821
F8.34	Arbitrarily reach current 2 width	0.0% to 300.0% (Motor rated current)	0.0%	○	0x0822

Function code	Name	Setting range	Default	Property	Modbus address
F8.35	Zero current detection value	0.0% to 300.0%(Motor rated current)	5.0%	○	0x0823
F8.36	Zero current detection delay time	0 to 600.00s	0s	○	0x0824
F8.37	Software over current point (D0 output)	0.0% to 300.0% (AC drive rated current)	200.0%	○	0x0825
F8.38	Software over current detection delay time	0 to 600.00s	0s	○	0x0826
F9 Functional parameter array					
F9.00	PID setting source	0: Keyboard number PID given F9.01 1: AI1 2: AI2 3: Reserve 4: Terminal pulse setting 5: Communication setting 6: Multi -stage speed setting 7: Keyboard potentiometer setting	0	○	0x0900
F9.01	PID digital setting	0.0% to 100.0%	50.0%	○	0x0901
F9.02	PID feedback source	0: AI1 1: AI2 2: Reserve 3: AI1-AI2 4: Terminal pulse setting 5: Communication setting 6: AI1+AI2 7: MAX(|AI1|, |AI2|) 8: MIN(|AI1|, |AI2|) 9: Keyboard potentiometer setting	0	○	0x0902
F9.03	PID control characteristics	LED units: Feedback characteristic selection 0: Positive action 1: Reaction LED tens: PID adjustment direction selection 0: Reverse prohibition 1: Reverse permit LED hundreds digit: Alignment selection 0: Off-center alignment 1: Center alignment	0100	○	0x0903

Function code	Name	Setting range	Default	Property	Modbus address
		LED kilobit: Reserve			
F9.04	PID given feedback range	0 to 65535	1000	○	0x0904
F9.05	Proportional gain P1	0 to 1000.0	20.00	○	0x0905
F9.06	Integration time I1	0.00s to 10.00s	2.00s	○	0x0906
F9.07	Differential time D1	0.00s to 10.00s	0.00s	○	0x0907
F9.08	PID reverse cutoff frequency	0.00 to Maximum frequency F0.10	0.00Hz	○	0x0908
F9.09	PID deviation limit	0.0% to 100.0%	0.0%	○	0x0909
F9.10	PID differential limiting	0.00% to 100.00%	0.10%	○	0x090A
F9.11	PID given change time	0.00 to 100.00s	0s	○	0x090B
F9.12	PID feedback filtering time	0.00 to 60.00s	0.00s	○	0x090C
F9.13	PID output filtering time	0.00 to 60.00s	0.00s	○	0x090D
F9.14	Proportional gain P2	0.0 to 1000.0	20.00	○	0x090E
F9.15	Integration time I2	0.00s to 10.00s	2.00s	○	0x090F
F9.16	Differential time D2	0.00s to 10.00s	0.00s	○	0x0910
F9.17	PID parameter switching condition	0: Do not switch 1: Terminal switching 2: Automatic switching based on deviation	0	○	0x0911
F9.18	PID parameter switching deviation 1	0.0% to F9.19	20.0%	○	0x0912
F9.19	PID parameter switching deviation 2	F9.18 to 100.0%	80.0%	○	0x0913
F9.20	PID Initial frequency value	0.0% to 100.0%	0%	○	0x0914
F9.21	PID Frequency initial holding time	0.0 to 6500.0s	0.0s	○	0x0915
F9.23	Feedback wire break action selection	0: The PID continues to run and no fault is reported 1: Stop and report fault (Manual reset) 2: Continue PID operation, output alarm signal 3: Run at the current frequency, output	0	○	0x0917

Function code	Name	Setting range	Default	Property	Modbus address
		alarm signal 4: Stop and report fault (Automatic reset)			
F9.24	Wire break alarm upper limit	F9.25 to 100.0%	100.0%	○	0x0918
F9.25	Line break alarm lower limit	0 to F9.24	0.0%	○	0x0919
F9.26	Feedback break detection time	0.0s to 120.0s	0.0s	○	0x091A
F9.27	PID stop operation	0: No operation at stop 1: Operation at stop	0	○	0x091B
F9.28	PID function selection	0: Normal PID 1: Dormant PID	0	○	0x091C
F9.29	PID sleep threshold	0.0% to 100.0%	60.0%	○	0x091D
F9.30	PID sleep delay	0.0 to 3600.0s	3.0s	○	0x091E
F9.31	PID wake-up threshold	0.0% to 100.0%	20.0%	○	0x091F
F9.32	PID wake up delay	0.0 to 3600.0s	3.0s	○	0x0920
F9.33	Dormancy detection frequency	0 to Upper limit frequency F0.12	25.00Hz	○	0x0921
F9.34	Minimum output	0: F0.14(Lower frequency) 1: 0Hz		●	0x0922
F9.35	Double output deviation reverse minimum	0.00 to 100.00%	1.00%	○	0x0923
F9.36	Double output deviation reverse maximum	0.00 to 100.00%	1.00%	○	0x0924
F9.37	PID integral attribute	Units place: integral separation 0: Invalid 1: Valid Tens: output to the limit, whether to stop integrating 0: Continue to integrate 1: Stop collecting points	0	○	0x0925
F9.38	PID Preset Switchover condition selection	0: Time 1: Switch according to AI1 feedback value	0	○	0x0926

Function code	Name	Setting range	Default	Property	Modbus address
F9.39	PID Minimum value of AI feedback switching	0.0 to F9.40	45.0%	○	0x0927
F9.40	PID AI feedback maximum switching value	F9.39 to 100.0%	55.0%	○	0x0928
FA Fault and protection parameter group					
FA.00	Motor overload protection selection	0: Off 1: On	1	○	0x0A00
FA.01	Motor overload protection factor	0.0 to 250.0%	100.0%	○	0x0A01
FA.02	Motor overload warning coefficient	20.0 to 250.0%	80.0%	○	0x0A02
FA.03	Overvoltage stall and overcurrent stall control selection	0: Off 1: On Unit: Excessive suppression enable Tens: Over current suppression enable Hundreds: Judge the input of brakes Thousands: Excessive suppression of fast rising frequency	1111	○	0x0A03
FA.04	Over voltage protection voltage	110% to 150%	Model settings	○	0x0A04
FA.05	The Udc controls voltage loop gain	0.00 to 50.00	2.00	○	0x0A05
FA.06	The Udc controls current loop gain	0.00 to 50.00	2.00	○	0x0A06
FA.07	Overcurrent suppression point	50% to 200%	150%	○	0x0A07
FA.08	Overcurrent suppression gain	0.00 to 50.00	2.00	○	0x0A08
FA.09	Overcurrent suppression points	0.00 to 50.00	4.00	○	0x0A09
FA.10	Short -circuit detection	0: Invalid 1: Valid	1	○	0x0A0A
FA.11	Input phase loss protection	0:Disable 1: Enable	1	○	0x0A0B
FA.12	Output phase loss protection	0:Disable 1: Enable	1	○	0x0A0C

Function code	Name	Setting range	Default	Property	Modbus address
FA.13	Input phase loss protection software detection level	0.0 to 999.9%	15.0%	○	0x0A0D
FA.14	PWM parameter setting	One place: Enable voltage prediction compensation Tens - place: PWM update mode 0: Single sample update 1: Double sample and double update Hundreds place: Random carrier mode 0: Random carrier 1: Random 0 vector	0010		0x0A0E
FA.15	Hardware current and voltage protection	One place: Hardware current limit(CBC) 0: Disable 1: Enable Tens places: - Hundreds place: FAU filtering time 1 to F Thousands place: TZ filtering time 1 to F	0001	○	0x0A0F
FA.16	CBC protection point	100-220%	200%	○	0x0A10
FA.17	CBC overload protection time	1 to 5000ms	500ms	○	0x0A11
FA.18	Undervoltage threshold setting	40.0% to 100.0%	100.0%	○	0x0A12
FA.19	Reserve	-	Model determination	◎	0x0A13
FA.20	Number of failure recovery	0 to 5	0	○	0x0A14
FA.21	Interval for fault self-recovery	0.1 to 100.0s	1.0s	○	0x0A15
FA.22	Power loss ride-through selection	One place: Power loss ride-through selection function enable 0: Disable 1: Enabled Tens place: Power loss ride-through function selection 0: Continue to operation 1: Shut down	0000	○	0x0A16

Function code	Name	Setting range	Default	Property	Modbus address
FA.23	Instant stop non-stop enter voltage	40% to 150%	75%	○	0x0A17
FA.24	Instant stop non-stop stable voltage	60% to 150%	95%	○	0x0A18
FB Application parameter set					
FB.00	Swing frequency control	LED one-place: Swing frequency control 0: The swing frequency control is invalid 1: Swing frequency control is valid LED tens place: Swing frequency input mode 0: Automatic input 1: Manual input LED hundreds-place: Swing control 0: Variable swing 1: Fixed swing LED thousands place: Reserved	0	●	0x0B00
FB.01	Swing preset frequency	0.00 to Maximum frequency	0.00Hz	●	0x0B01
FB.02	Preset frequency duration	0.00 to 650.00s	0.00s	●	0x0B02
FB.03	Swing amplitude	0.0 to 100.0%	0.0%	●	0x0B03
FB.04	Jump frequency amplitude	0.0 to 50.0%	0.0%	●	0x0B04
FB.05	Swing frequency rise time	0.00 to 650.00s	5.00s	●	0x0B05
FB.06	Swing frequency drop time	0.00 to 650.00s	5.00s	●	0x0B06
FC Communication parameter group					
FC.00	Local address	1 to 247, 0 is Broadcast address	1	○	0x0C00
FC.01	Baud rate	0: 300 bps 1: 600 bps 2: 1200 bps 3: 2400 bps 4: 4800 bps 5: 9600 bps 6: 19200 bps 7: 38400 bps 8: 57600 bps 9: 115200 bps	5	○	0x0C01

Function code	Name	Setting range	Default	Property	Modbus address
FC.02	Modbus data format	0: (8.N.2) 8 data bits, no parity, 2 stop stops 1: (8.E.1) 8 data bits, even parity, 1 stop position 2: (8.O.1) 8 data bits, odd parity, 1 stop stop 3: (8.N.1) 8 data bits, no parity, 1 stop stop	3	○	0x0C02
FC.03	Modbus Communication response delay	0ms to 20ms	2ms	○	0x0C03
FC.04	Modbus Communication timeout	0.0 (Invalid), 0.1s to 60.0s	0	○	0x0C04
FC.06	Master-slave selection	LED units place: Modbus communication master-slave selection 0: Slave 1: Host	0		
FC.07	Communication ratio setting	0.00 to 5.00	1.00		
FC.08	Modbus communication fault action mode selection	0: Alarm and free parking (manual reset) 1: No alarm and continue running 2: Alarm and free parking (automatic reset) 3: Parking does not alarm (based on F1.10 parking)	1		
FC.09	Modbus transfers response processing	Units place: Write operation response 0: Response to the write operation 1: No response to write operation Tens Place: Communication exception response 0: Response to exception 1: No response to exception Hundreds place: Communication exception response protocol 0:8001 1:83	000		
FC.10	Hosts send selection	LED units place: 1st group sending frame selection LED tens place:2st group sending frame selection LED hunderds place: 3st group sending frame selection	0x21		

Function code	Name	Setting range	Default	Property	Modbus address
		0: Invalid 1: Running command given 2: Host given frequency 3: Host output frequency 4: Host upper limit frequency 6: Host output torque 9: Host given PID A: Host feedback PID			
FC.11	RS485 communication port configuration	0: Configure to Modbus Communication 1: Quota is serial communication 2: UART_OSC	0		
FD Multi -speed instructions and simple PLC parameter arrays					
FD.00	Multi-speed instruction 0	-100.0% to 100.0% (100.0% corresponds to maximum frequency F0.10)	0	○	0x0D00
FD.01	Multi-speed instruction 1	-100.0% to 100.0%	0	○	0x0D01
FD.02	Multi-speed instruction 2	-100.0% to 100.0%	0	○	0x0D02
FD.03	Multi-speed instruction 3	-100.0% to 100.0%	0	○	0x0D03
FD.04	Multi-speed instruction 4	-100.0% to 100.0%	0	○	0x0D04
FD.05	Multi-speed instruction 5	-100.0% to 100.0%	0	○	0x0D05
FD.06	Multi-speed instruction 6	-100.0% to 100.0%	0	○	0x0D06
FD.07	Multi-speed instruction 7	-100.0% to 100.0%	0	○	0x0D07
FD.08	Multi-speed instruction 8	-100.0% to 100.0%	0	○	0x0D08
FD.09	Multi -speed instruction 9	-100.0% to 100.0%	0	○	0x0D09
FD.10	Multi-speed instruction10	-100.0% to 100.0%	0	○	0x0D0A
FD.11	Multi-speed instruction11	-100.0% to 100.0%	0	○	0x0D0B
FD.12	Multi-speed instruction12	-100.0% to 100.0%	0	○	0x0D0C

Function code	Name	Setting range	Default	Property	Modbus address
FD.13	Multi-speed instruction13	-100.0% to 100.0%	0	○	0x0D0D
FD.14	Multi-speed instruction14	-100.0% to 100.0%	0	○	0x0D0E
FD.15	Multi-speed instruction15	-100.0% to 100.0%	0	○	0x0D0F
FD.16	PLC mode of operation	0: Stops after a single run 1: Maintain the final value at the end of a single run 2: Keep cycling	0	○	0x0D10
FD.17	PLC Power down memory selection	Ones Slot: 0: Power failure does not memory 1: Power failure memory Ten places: 0: Stop and does not remember 1: Shutdown memory	0	○	0x0D11
FD.18	Running time of simple PLC reference 0	0.0 to 6553.5 (s/m/h)	0.0s(h)	○	0x0D12
FD.19	Acceleration/deceleration time of simple PLC reference 0	0 to 3	0	○	0x0D13
FD.20	Running time of simple PLC reference 1	0.0-6553.5 (s/m/h)	0.0s(h)	○	0x0D14
FD.21	Acceleration/deceleration time of simple PLC reference 1	0 to 3	0	○	0x0D15
FD.22	Running time of simple PLC reference 2	0.0-6553.5 (s/m/h)	0.0s(h)	○	0x0D16
FD.23	Acceleration/deceleration time of simple PLC reference 2	0 to 3	0	○	0x0D17
FD.24	Running time of simple PLC reference 3	0.0-6553.5 (s/m/h)	0.0s(h)	○	0x0D18

Function code	Name	Setting range	Default	Property	Modbus address
FD.25	Acceleration/deceleration time of simple PLC reference 3	0 to 3	0	○	0x0D19
FD.26	Running time of simple PLC reference 4	0.0 to 6553.5 (s/m/h)	0.0s(h)	○	0x0D1A
FD.27	Acceleration/deceleration time of simple PLC reference 4	0 to 3	0	○	0x0D1B
FD.28	Running time of simple PLC reference 5	0.0 to 6553.5(s/m/h)	0.0s(h)	○	0x0D1C
FD.29	Acceleration/deceleration time of simple PLC reference 5	0 to 3	0	○	0x0D1D
FD.30	Running time of simple PLC reference 6	0.0 to 6553.5 (s/m/h)	0.0s(h)	○	0x0D1E
FD.31	Acceleration/deceleration time of simple PLC reference 6	0 to 3	0	○	0x0D1F
FD.32	Running time of simple PLC reference 7	0.0 to 6553.5 (s/m/h)	0.0s(h)	○	0x0D20
FD.33	Acceleration/deceleration time of simple PLC reference 6	0 to 3	0	○	0x0D21
FD.34	Running time of simple PLC reference 8	0.0 to 6553.5 (s/m/h)	0.0s(h)	○	0x0D22
FD.35	Acceleration/deceleration time of simple PLC reference 8	0 to 3	0	○	0x0D23
FD.36	Running time of simple PLC reference 9	0.0 to 6553.5 (s/m/h)	0.0s(h)	○	0x0D24
FD.37	Acceleration/deceleration time of simple PLC reference 9	0 to 3	0	○	0x0D25

Function code	Name	Setting range	Default	Property	Modbus address
FD.38	Running time of simple PLC reference 10	0.0 to 6553.5 (s/m/h)	0.0s(h)	○	0x0D26
FD.39	Acceleration/deceleration time of simple PLC reference 10	0 to 3	0	○	0x0D27
FD.40	Running time of simple PLC reference 11	0.0 to 6553.5 (s/m/h)	0.0s(h)	○	0x0D28
FD.41	Acceleration/deceleration time of simple PLC reference 11	0 to 3	0	○	0x0D29
FD.42	Running time of simple PLC reference 12	0.0-6553.5 (s/m/h)	0.0s(h)	○	0x0D2A
FD.43	Acceleration/deceleration time of simple PLC reference 12	0 to 3	0	○	0x0D2B
FD.44	Running time of simple PLC reference 13	0.0 to 6553.5 (s/m/h)	0.0s(h)	○	0x0D2C
FD.45	Acceleration/deceleration time of simple PLC reference 13	0 to 3	0	○	0x0D2D
FD.46	Running time of simple PLC reference 14	0.0 to 6553.5 (s/m/h)	0.0s(h)	○	0x0D2E
FD.47	Acceleration/deceleration time of simple PLC reference 14	0 to 3	0	○	0x0D2F
FD.48	Running time of simple PLC reference 15	0.0-6553.5 (s/m/h)	0.0s(h)	○	0x0D30
FD.49	Acceleration/deceleration time of simple PLC reference 15	0 to 3	0	○	0x0D31

Function code	Name	Setting range	Default	Property	Modbus address
FD.50	PLC Run-time unit	LED units: timing unit 0: s(seconds) 1: h(hours) 2: min(minutes)	0	○	0x0D32
FD.51	Multi-segment speed instruction 0 given mode	0: Function code FD.00 is given 1: AI1 2: AI2 3: AI3 (expansion) 4: Terminal pulse PULSE given 5: PID 6: Preset frequency (F0.08) given, UP/DOWN modifiable 7: Keyboard potentiometer given	0	○	0x0D33
FD.52	Multispeed priority	0: Invalid 1: Valid	1	○	0x0D34
FE User parameter group					
FE.00	User password	0 to 65535	0	○	0x0E00
FE.01	Fault record display times	0 to 8	4	○	0x0E01
FE.02	Parameter and key lock selection	0: Not locked 1: The function parameter is locked 2: Function parameters and key lock (except RUN/STOP/JOG) 3: All function parameters and keys are locked.	0	○	0x0E02
A0 Application parameter group					
A0.00	Application macro	0:Default macro 1: Pressure machine macro 2: Spring machinery macro 3: woodworking machinery macro	0	●	0xA000
A4 Constant pressure water supply parameter group					
A4.00	Water supply function selection	0: Invalid 1: Valid	0	●	0xA400
A4.01	Setting pressure	1.0 to A4.19	3.0bar	○	0xA401
A4.02	Starting pressure	0.0 to A4.01	0.3bar	○	0xA402
A4.03	Sensor range	1.0 to 200.0bar	16.0bar	○	0xA403

Function code	Name	Setting range	Default	Property	Modbus address
A4.04	Sensor feedback type	0: 4 to 20mA（AI2） 1: 0 to 10V（AI1）	0	○	0xA404
A4.05	Pressure calibration factor	0.750 to 1.250	1.000	○	0xA405
A4.06	Proportional gain P	0.0 to 100.0	50.0	○	0xA406
A4.07	Integration time I	0.00s to 10.00s	0.50	○	0xA407
A4.08	Differential time	0.000s to 10.000s	0.000	○	0xA408
A4.09	Sleep time	0: Disable 1: Sleep mode 1 2: Sleep mode 2	1	○	0xA409
A4.10	Sleep delay	0.0s to 100.0s	5.0s	○	0xA40A
A4.11	Wake up delay	0.0s to 100.0s	3.0	○	0xA40B
A4.12	Low-frequency hold frequency	0.0 to A4.14	20.00Hz	○	0xA40C
A4.13	Low frequency hold frequency running time	0.0s to 100.0s	5.0s	○	0xA40D
A4.14	Sleep frequency	A4.12 to F0.12	25.00Hz	○	0xA40E
A4.15	Sleep detection cycle	0.0s to 600.0s	30.0s	○	0xA40F
A4.16	Leaking coefficient	0.1s to 100.0s	2.5s	○	0xA410
A4.17	Sleep detection coefficient	1 to 10	4	○	0xA411
A4.18	Deadband pressure	0.0bar to 1.0bar	0.1bar	○	0xA412
A4.19	High voltage alarm setting value	A4.00 to A4.03	15.0bar	○	0xA413
A4.20	Low voltage alarm setting value	0.0 to A4.01	0.0bar	○	0xA414
A4.21	Water pressure alarm delay time	0.0 to 100.0	3.0s	○	0xA415
A4.22	Sensor disconnection detection value	0.00 to 10.00V	0.20	○	0xA416
A4.23	Sensor disconnection detection time	0.0s to 100.0s	30.0s	○	0xA417
A4.24	Water shortage protection function	0: Disable 1: Judging by frequency and current 2: Judging by frequency and pressure	2	○	0xA418

Function code	Name	Setting range	Default	Property	Modbus address
A4.25	Water shortage fault detection threshold	0.00s to 10.00s	0.50	○	0xA419
A4.26	Water shortage protection detection frequency	0 to F0.12	48.00Hz	○	0xA41A
A4.27	Water shortage protection detection current percentage	0.0 to 100.0%	40.0%	○	0xA41B
A4.28	Water shortage protection detection time	0.0 to 200.0s	60.0s	○	0xA41C
A4.29	Water shortage protection automatic reset delay	0 to 1000	15	○	0xA41D
A4.30	Number of Auto-resets for water shortage protection	0 to 100	10	○	0xA41E
A4.31	Pressure rise control function	0: Invalid 1: Valid	0	○	0xA41F
A4.35	Constant frequency water shortage function selection	One place: Turn on protection 0: Disable 1: Enable Tens place: Current detected 0: Total current 1: Torque current	0010		
A4.36	Constant frequency water shortage protection current	0% to 150%	40%		
A4.37	Constant frequency water shortage protection frequency	0% to 100%	50%		
A4.38	Constant frequency water shortage protection detection time	1 to 1000s	30s		

Function code	Name	Setting range	Default	Property	Modbus address
A4.39	Constant frequency water shortage protection recovery time	1 to 10000s	600s		
A4.40	Constant frequency water shortage protection recovery times	0 to 100	3		

6.2 Fault record parameter group

Function code	Name	Setting range and description	Change	Modbus address
E0 Fault parameter set				
E0.00	Fault type	Refer to the fault Information code table for detail	◎	0xE000
E0.01	Failure operating frequency	0.0 to Maximum frequency	◎	0xE001
E0.02	Fault output current	0.1 to 2000.0A	◎	0xE002
E0.03	Fault bus voltage	0 to 810.0V	◎	0xE003
E0.04	Fault input terminal status	Refer to the input terminal state diagram	◎	0xE004
E0.05	Fault output terminal status	Refer to the output terminal state diagram	◎	0xE005
E0.06	Fault module temperature	0 to 100℃	◎	0xE006
E0.07	Fault VFD condition	LED one place: Running direction 0: Forward 1: Reverse LED tens place: Running status 0: Stop 1: Steady speed 2: Speed up 3: Slow down	◎	0xE007
E0.08	Down time (Count from this power-on)	0 to 65535min	◎	0xE008
E0.09	Down time (From total running time)	0 to 65535H	◎	0xE009
E0.10	Fault output voltage	0 to 1500V	◎	0xE00A
E0.11	Fault diagnosis information	Refer to (Chapter 8 to Fault Code Details)	◎	0xE00B
E0.12	Number of faulty CBC	10Sec if no CBC zeroing	◎	0xE00C

6.3 Display parameter group

Function code	Name	Minimum unit	Change	Modbus address
D0 Display parameter group				
D0.00	Running frequency(Hz)	0.01Hz	◎	0xD000
D0.01	Setting frequency(Hz)	0.01Hz	◎	0xD001
D0.02	Bus voltage(V)	0.1V	◎	0xD002
D0.03	Output voltage(V)	1V	◎	0xD003
D0.04	Output current(A)	0.1A	◎	0xD004
D0.05	Output power(kW)	0.1kW	◎	0xD005
D0.06	Output torque(%)	0.1%	◎	0xD006
D0.07	DI Input state		◎	0xD007
D0.08	DO Output state		◎	0xD008
D0.09	AI1 Voltage (V)	0.01V	◎	0xD009
D0.10	AI2 Voltage(V)	0.01V	◎	0xD00A
D0.11	AO1 Voltage(V)	0.01V	◎	0xD00B
D0.12	Count value		◎	0xD00C
D0.13	Axis Frequency		◎	0xD00D
D0.14	Load speed display	1rpm	◎	0xD00E
D0.15	PID setting		◎	0xD00F
D0.16	PID feedback		◎	0xD010
D0.17	PLC phase		◎	0xD011
D0.18	PULSE input pulse frequency		◎	0xD012
D0.19	Feedback speed(Unit0.1Hz)		◎	0xD013
D0.20	Remaining running time		◎	0xD014
D0.21	AI1Pre-correction voltage		◎	0xD015
D0.22	AI2Pre-correction voltage		◎	0xD016
D0.23	Reserve		◎	0xD017
D0.24	Linear velocity		◎	0xD018
D0.25	Current power-on time	1min	◎	0xD019
D0.26	Current running time	0.1min	◎	0xD01A

Function code	Name	Minimum unit	Change	Modbus address
D0 Display parameter group				
D0.27	CPU temperature		◎	0xD01B
D0.28	Communication setting		◎	0xD01C
D0.29	Radiator temperature		◎	0xD01D
D0.30	Main frequency X display	0.01Hz	◎	0xD01E
D0.31	Auxiliary frequency Y display	0.01Hz	◎	0xD01F
D0.34	Reserve		◎	0xD022
D0.35	Analog grounding		◎	0xD023
D0.36	3.3VA		◎	0xD024
D0.37	Control board plate number		◎	0xD025
D0.38	Plate number of the power board		◎	0xD026
D0.39	Power factor Angle		◎	0xD027
D0.40	Virtual VDI state		◎	0xD100
D0.41	Virtual VDO state		◎	0xD101
D0.42	Expand DI input status		◎	0xD102
D0.43	Expand DO input status		◎	0xD103
D0.44	Expansion board version		◎	0xD104
D0.45	AI3 (Expand) voltage (V)	0.01V	◎	0xD105
D0.46	AI4 (Expand) voltage (V)	0.01V	◎	0xD106
D0.49	AO2 Voltage (V)	0.01V	◎	0xD109
D0.53	Communication status of the main control board		◎	0xD10D
D0.54	Extended communication status		◎	0xD10E

6.4 A0 Application parameter group

✎**Note:** As the software iterates, the parameter list may change.

Function code	Name	Minimum unit	Change	Modbus address
A0 Application parameter set				
A0.00	Application macro	0: Default macro 1: Pressure tile machinery macro 2: Spring machinery macro 3: Woodworking machinery macro	●	0xA000

Chapter 7 Communication protocol

VC AC Drive Standard equips RS485 Communication interface, located in the signal terminal area. It has 2 independent terminals, and the keyboard outgoing interface of VC is RJ45 tied in with Modbus communication protocol.
The user can set the start and stop of the inverter through the function, modify or read the function code parameters, and read the working status and fault information of VFD

7.1 Protocol content

The serial communication protocol defines the content and format of information transmitted in serial communication. It includes the host polling (or broadcast) format; The coding method of the host, including the function code of the required action, the transmission data, and the error check. The slave's response also adopts the same structure, including action confirmation, return data, and error checking. If the slave machine makes an error while receiving information, or fails to perform the action required by the host, it will organize a fault message as a response to the host.

7.2 Application mode

The inverter is connected to the "single master multi-slave" PC/PLC control network with RS485 bus.

7.3 Bus structure

1.Interface: RS485 hardware interface
2.Transmission mode: asynchronous serial, half duplex transmission mode. At the same time, only one host and slave can send data and the other can only receive data. In the process of serial asynchronous communication, data is sent frame by frame in the form of packets.
3.Topological structure: In a single-master multi-slave system, the address range of the slave is 1-31, 0 Indicates the broadcast communication address. The slave address in the network must be unique.

7.4 Protocol specification

VC series VFD communication protocol is an asynchronous serial master-slave ModBus communication protocol in which only one device (the host) in the network can establish the protocol (called "query/command"). Other devices (slave) can only respond to the query/command of the host by providing data, or perform corresponding actions according to the query/command of the host. The host here refers to a personal computer (PC), industrial control equipment or programmable logic controller (PLC), etc., and the slave refers to the VC inverter. The host can communicate with one slave individually, and broadcast information to all the lower slaves. For individually accessed host "queries/commands", the slave returns a message (called a response), and for broadcast messages sent by the host, the slave does not need to respond back to the host.

7.5 Communication frame specification

With RTU mode, message delivery starts with a pause interval of at least 3.5 character times. With a variety of character times at network baud rates, this is easiest to achieve. The first domain to be transmitted is the device address. The transmission character that can be used is hexadecimal 0... 9, A... F. Network devices constantly detect the network bus, including during pause intervals. When the first domain (address domain) receives it, each device decodes it to determine whether to send it to its own. After the last transmitted character, a pause of at least 3.5 character time marks the end of the message. A new message can start after this pause. The entire message frame must be transmitted as a continuous flow. If there is a pause time of more than 1.5 character times before frame completion, the receiving device will refresh the incomplete message and assume that the next byte is the address field of a new message. Similarly, if a new message starts after the previous message in less than 3.5 characters, the receiving device will consider it a continuation of the previous message. This will result in an error because the value in the last CRC field cannot be correct.

RTU The frame format is as follows:

Frame header START	3.5 characters
Slave address ADR	Communication address: 1-247
Command code MD	03: Read slave parameters; 06: Write slave parameters
Data content (DATA N-1)	Information content: Function code parameter address, function code parameter number, function code value, etc
Data content (DATA N-2)	
.....	
Data content DATA0	
CRCCHK high byte	Detection value: CRC value
CRCCHK low byte	Detection value: CRC value
END	3.5 character time

Table 7-5-1 RTU Frame format

Reads the slave register data

Example 1: Read two consecutive values continuously from the start address F002 of the VFD whose address is 01.

Host command information:

ADR	01H
CMD	03H
Start address high byte	F0H
Start address low- byte	02H
Register count high byte	00H
Register count low byte	02H
CRCCHK low byte	The CRCCHK value needs to be calculated
CRCCHK high byte	

Table 7-5-2 The host reads the command frame format

Slave responds to message:

ADR	01H
CMD	03H
Byte count	04H
Date F002H high-order	00H
Date F002H low-order	00H
Date F003H high-order	00H
Date F003H low-order	01H
CRCCHK low-order	The CRCCHK value needs to be calculated
CRCCHK high-order	

Table 7-5-3 Read the response message frame format from the slave machine

Writes slave register data

Example2: Write 5000 (1388H) to the F00AH address of the inverter at slave address 02H.

Host command information:

ADR	02H
CMD	06H
Data address high-order	F0H
Data address low-order	0AH
Data content high-order	13H
Data content low-order	88H
CRCCHK low-order	The CRCCHK value needs to be calculated
CRCCHK high-order	

Table 7-5-4 The host writes the command frame format

Slave responds to message:

ADR	02H
CMD	06H
Data address high-order	F0H
Data address high-order	0AH
Data address low-order	13H
Data content high-order	88H
CRCCHK low-order	The CRCCHK value needs to be calculated
CRCCHK high-order	

Table 7-5-5 Slave response message frame format

Check mode——CRC Check mode:

Using the RTU frame format, the message includes an error-detection field based on CRC methods. The CRC domain detects the contents of the entire message. The CRC field is a two-byte, 16-bit binary value. It is calculated by the transmitting device and added to the message. The receiving device recalculates the CRC of the received message and compares it with the value in the received CRC field. If the two CRC values are not equal, there is a transmission error. The CRC first stores 0xFFFF and then invokes a procedure to process the consecutive 8-bit bytes in the message with the

value in the current register. Only 8 bits of data per character are valid for CRC, and the start and stop bits and parity bits are not valid. During CRC generation, each 8-bit character is individually distinct from the register content or (XOR), and the result moves in the direction of the least significant bit and the most significant bit is filled with 0. The LSB is extracted for detection, if the LSB is 1, the register alone is different from the preset value or if the LSB is 0, it is not performed. The whole process is repeated eight times. After the last bit (the 8th bit) is completed, the next 8-bit byte separately differs from the current value of the register. The value in the final register is the CRC value after all bytes in the message have been executed. When CRC is added to a message, low bytes are added first, then high bytes.

When CRC is added to a message, the low byte is added first, followed by the high byte. The CRC simple function is as follows:

```
    unsigned int crc_chk_value(unsigned char *data_value,unsigned
char length)
    {
        unsigned int crc_value = 0xFFFF;
        int i;

        while(length--)
        {
            crc_value ^= *data_value++;
            for(i=0;i<8;i++)
            {
                if(crc_value&0x0001)
                {
                    crc_value = (crc_ value>>1) ^ 0xa001;
                }
                else
                {
                    crc_value = crc_ value >> 1;
                }
            }
        }
        return(crc_value);
    }
```

The address definition of communication parameters: This part is the content of communication, which is used to control the operation of the VFD, the status of the VFD and the related parameter Settings (some function codes cannot be changed, only for manufacturers to use).

✎**Note:** FF parameter group: Parameters can neither be read nor changed; Some parameters cannot be changed when the inverter is in operation; Some parameters can not be changed no matter what state the inverter is in; Change the function code parameters, but also pay attention to the range of parameters, units, and related descriptions.

Because EEPROM is stored frequently, the service life of EEPROM will be reduced, so the communication design or configuration of the upper computer shall pay attention to avoid frequent writing operation.

7.6 Register address

Parameter address	Parameter description	Unit
1000H	Communication Settings (-10000-10000) (Decimalism)	0.01%
1001H	Operating frequency	0.01Hz
1002H	Bus voltage	0.1V
1003H	Output voltage	1V
1004H	Output current	0.01A
1005H	Output power	0.1kW
1006H	Output torque	0.1%
1007H	Running speed	0.01Hz
1008H	DI Input mark	1
1009H	DO Output mark	1
100AH	AI1 Voltage	0.01V
100BH	AI2 Voltage	0.01V
100CH	Reserve	—
100DH	Count input	1 time
100EH	Length value input	1 time
100FH	Load speed	1rpm
1010H	PID given	0.10%
1011H	PID feedback	0.10%
1012H	PLC step	1 (Range 0-15)
1013H	PULSE Input pulse frequency, Unit 0.01KHz	0.01Hz
1014H	Reserve	—
1015H	Remaining running time	1min
1016H	AI1 Pre-correction voltage	0.001V
1017H	AI2 Pre-correction voltage	0.001V
1018H	Reserve	—
1019H	Linear velocity	1m/min
101AH	Current power-on time	1 min
101BH	Current running time	0.1 min
101CH	Reserve	—
101DH	Communication setting value	(-10000-10000)
101EH	Reserve	—
101FH	Main frequency X display	0.01Hz
1020H	Auxiliary frequency Y display	0.01Hz

✎**Note:** The communication set point is a percentage of the relative value, 10000 corresponds to 100.00% and -10000 corresponds to -100.00%. For data in the frequency dimension, the percentage is the percentage of the relative maximum frequency (F0-10); for data in the torque dimension, the percentage is F2-10 (Torque upper limit number setting).

Control command input to inverter: (write only)

Instruction word address	Function
2000H	0001: Forward running
	0002: Inverted running
	0003: Forward point
	0004: Inverted point
	0005: Free stop
	0006: Slow down stop
	0007: Fault reset

Table 7-6-2 Command function parameter list

Read inverter status: (read only)

Instruction word address	Function
3000H	0001: Forward running
	0002: Inverted running
	0003: AC drive standby
	0004: AC drive fault
	0005: AC drive undervoltage
	0006: Slow down stop

Table7-6-3 Read the inverter status information table

Parameter lock password verification

(If 8888H is returned, the password verification succeeds)

Password address	Enter the contents of the password
1F00H	*****

Table 7-6-4 Password verification address and format

Digital output terminal control: (write only)

Instruction word address	Function
2001H	BIT0-BIT1: Reserve
	BIT2: RELAY1 Output control
	BIT3: RELAY2 Output control
	BIT4: FMR Output control
	BIT5: VDO
	BIT6-BIT9: Reserve

Table 7-6-5 Digital output control

Analog output AO1 control: (Write only)

Instruction word address	Function
2002H	0 to 7FFF representation 0% to 100%

Table 7-6-6 Analog output A01 control

Analog output AO2 control: (Write only)

Instruction word address	Function
2003H	0 to 7FFF representation 0% to 100%

Table 7-6-7 Analog output A02 control

PULSE output control: (Write only)

Instruction word address	Function
2004H	0 to 7FFF representation 0% to 100%

Table 7-6-8 PULSE Output control

AC drive fault description:

AC drive fault address	AC drive fault information
8000H	0000: No fault 0001: Reserved 0002: Accelerates over current 0003: Decelerating over current 0004: Constant over current 0005: Acceleration over voltage 0006: Decelerating over voltage 0007: Constant over voltage 0008: Buffer resistance overload fault 0009: Under voltage fault 000A: AC drive overloaded 000B: Motor overloaded 000C: Input open phase 000D: Output open phase 000E: The module overheats 000F: External fault 0010: The communication is abnormal 0011: Reserved 0012: Current detection fault 0013: Motor tuning failure 0015: Parameter read and write exception 0016: EEPROM verification is faulty 0017: Motor short circuit to ground fault 001A: The running time is up

AC drive fault address	AC drive fault information
	001B: User-defined fault 1 001C: User-defined fault 2 001D: The power-on time arrives 001E: Reserved 001F: PID feedback is lost during running 0028: The fast current limiting times out 0029: Reserved

Figure 7-6-9 Inverter fault information

Communication fault information description data (fault code):

Communication fault address	Fault function description
8001H	0000: No fault 0001: The password is incorrect. 0002: The instruction code is incorrect. 0003: CRC check error 0004: Invalid address 0005: Invalid parameter 0006: The parameter change is invalid 0007: The system is locked 0008: Operating in EEPROM

Table 7-6-10 Communication fault information description data table

Parameters for FC group communication

FC.00	Local address	Factory default	1
	Set range	0 to 247	

When the local address is set to 0, it is the broadcast address, and the host computer broadcast function is realized. The local address is unique (except broadcast place Off-site), which is the basis for point-to-point communication between the host computer and the inverter.

FC.01	**Baud rate**	**Factory default**	5
	Set range	0: 300 bps 1: 600 bps 2: 1200 bps 3: 2400 bps 4: 4800 bps 5: 9600 bps 6: 19200 bps 7: 38400 bps	

This parameter used to setting the data transmission rate between the host computer and the AC drive. Note that the baud rate set by the upper computer and AC drive must be consistent. Otherwise, the communication can't be carried out. The higher the baud rate, the faster the communication speed is.

FC.02	**Data bits and check Settings**	**Factory default**	3
	Setting range	0: (8.N.2) 8 -Bit, No check, 2 stop bit 1: (8.E.1) 8-Bit, Even check, 1 stop bit 2: (8.O.1) 8-Bit, Odd check, 1 stop bit 3: (8.N.1) 8-Bit, No check, 1 stop bit	

The data format set by the upper computer and the inverter must be consistent, otherwise, the communication cannot be carried out.

FC.03	**Response time**	**Factory default**	2ms
	Setting range	0 to 20ms	

Response delay: refers to the intermediate interval between the end of the VFD data acceptance and the sending of data to the upper machine. If the response delay is less than the system processing time, the response delay is based on the system processing time. If the response delay is longer than the system processing time, the system will wait until the response delay time reaches the upper computer before sending the data.

FC.04	**Communication timeout**	**Factory default**	0.0s
	Setting range	0.0s (Invalid), 0.1 to 60.0s	

When the function code is set to 0.0s, the communication timeout parameter is invalid.

When this function code is set to valid value, if the interval between one communication and the next communication exceeds the communication timeout period, the system reports a communication fault error (Err16).Usually, this is set to invalid. If you set the next parameter in a continuous communication system, you can monitor the communication status.

FC.05	**Communication read current resolution**	**Factory default**	0
	Setting range	0: 0.01A 1: 0.1A	

The output unit used to determine the current value when the communication reads the output current.

7.7 EEPROM address specifications

The communication address listed in the function code table is the write RAM address, and the data will not be saved after the RAM storage is powered off. In the communication mode, for the write command "06H", if the parameter needs to be powered off, the way should be written to EEPROM, and the highest bit "0" of the original RAM address should be changed to "F" to convert the corresponding EEPROM address, such as: Change "0XXX" to "FXXX"

※Address translation example:

The maximum output frequency is F010, the communication address of the write RAM is: 000A, and the corresponding EEPROM address is: F00A.

The acceleration time is F018, the communication address of the write RAM is 0012, and the corresponding EEPROM address is F012.

Other parameters, and so on...

✎**Note:** The erasing life of EEPROM is about 1 million times, more than the erasing times, will affect the reliability of data storage, if not necessary, it is recommended to use the way of writing RAM communication.

Chapter 8 Fault diagnosis and countermeasures

8.1 Failure code specification

Fault code	Fault type	Fault cause	Counter plan
Err01	Output short-circuit fault	The output circuit of the inverter has a short circuit	Ask for technical support
Err02	Accelerating over current	The output circuit of the inverter is grounded or short-circuited	Remove peripheral faults and check whether short circuit occurs at the motor end
		The acceleration time is set too short	Increase acceleration time
		Start the rotating motor	Choose speed tracking and start again or wait until the motor stops
		Inverter selection is small	Choose the inverter that matches the power and load of the motor
Err03	Retarding over current	The output circuit of the inverter is grounded or short-circuited	Remove peripheral faults and check whether short circuit occurs at the motor end
		The deceleration time is set too short	Increase deceleration time
Err04	Constant over current	The output circuit of the inverter is grounded or short-circuited	Remove peripheral faults and check whether short circuit occurs at the motor end
		Inverter selection is small	Choose the inverter that matches the power and load of the motor
Err05	Accelerating overvoltage	Input voltage is too high	Adjust the input voltage to the normal range
		An external force drives the motor during acceleration	Remove additional power or install brake resistors
		The acceleration time is too short	Increase acceleration time
		No additional brake unit and brake resistance	Install brake unit and brake resistor
Err06	Deceleration overvoltage	The input voltage is too high	Adjust the input voltage to the normal range
		An external force drives the motor during deceleration	Remove additional power or install brake resistors
		Slow down time is too short	Increase acceleration time
		No additional brake unit and brake resistance	Install brake unit and brake resistor

Fault code	Fault type	Fault cause	Counter plan
Err07	Constant speed overvoltage	High input voltage	Adjust the input voltage to the normal range
		In the process of constant speed, an external force drags the motor to run	Remove additional power or install brake resistors
Err09	Undervoltage fault	Transient outage condition	Enable the instant stop function (FA.22) to avoid instantaneous power failure and under voltage failure
		The input voltage of the inverter is not within the specification range	Adjust the input voltage to the normal range
		Bus voltage detection is abnormal; Rectifier bridge, buffer resistance, drive board, control board abnormal	Ask for technical support
Err10	AC drive overload	The load is too large or the motor is blocked	Reduce load and check motor and mechanical condition
		AC drive selection is low grade	Choose a AC drive with higher power
Err11	Motor overload	Motor overload protection parameters (FA.01-FA.02) are not set properly	Set this parameter correctly
		The load is too large or the motor is blocked	Reduce load and check motor and mechanical condition
Err12	Input phase loss	The three-phase input power supply is abnormal	Check and troubleshoot problems in peripheral wiring
		The driver board and control board are abnormal	Ask for technical support
Err13	Output phase loss	Motor fault	Detect whether the motor winding is broken
		The lead from the inverter to the motor is abnormal	Peripheral troubleshooting
		The inverter three-phase output is unbalanced when the motor is running	Check whether the three-phase winding of the motor is normal and remove the fault
		The driver or IGBT module is abnormal	Ask for technical support
Err14	Module overheating	Ambient temperature is too high.	Reduce ambient temperature
		Duct clogging	Air duct cleaning
		Fan exception	Replace the fan
		The thermistor or inverter module is damaged.	Ask for technical support

Fault code	Fault type	Fault cause	Counter plan
Err15	External equipment fault	Input external fault signals through the multi-function terminal DI	Troubleshooting external faults
		Input external fault signals through the virtual terminal VDI	Modified confirm VDI terminal function selection (F5.10) and VDO output selection (F6.06)
Err16	Communication fault	The upper computer works abnormally	Check the cables to the upper computer
		RS485 communication cable is abnormal	Check the communication cable
		FC group of communication parameters is incorrectly set	Correct setting of communication parameters (address, baud rate, check bit)
Err18	Current detection fault	The current detection circuit is abnormal	Ask for technical support
		Control board anomaly	Ask for technical support
Err19	Motor tuning fault	Motor parameters are not set according to the nameplate	Set motor parameters according to nameplate
		Parameter identification process timed out	Check the VFD to the motor lead
Err21	Data overflow	Control board anomaly	Ask for technical support
Err22	EEPROM read-write fault	EEPROM chip damage	Ask for technical support
Err23	Ground short circuit fault	The output line of the motor or inverter is short circuited to the ground	Measure the insulation of the motor and output line with a pendulum
		Driver board exception	Ask for technical support
Err26	Cumulative running time arrived	The accumulated running time reaches the set value	Use the parameter initialization function to clear record information
Err27	User-defined fault 1	Input a custom signal for fault 1 through the multi-function terminal DI	Check and troubleshoot user-defined faults 1
Err28	User-defined fault 2	Input a custom signal for fault 2 through the multi-function terminal DI	Check and troubleshoot user-defined faults 2
Err29	The accumulated power-on time reaches the fault	The cumulative power-on time reaches the set value	Use the parameter initialization function to clear record information
Err31	PID feedback loss during running	PID feedback signal is abnormal	Detect the PID feedback signal source
		PID The actual feedback is less	Correctly set the PID feedback

Fault code	Fault type	Fault cause	Counter plan
		than the feedback loss detection value	loss detection value and time
Err40	Wave-by-wave current limiting fault	The load is too large or the motor is blocked	Reduce load and check motor and mechanical condition
		Inverter selection is small	Choose a inverter with higher power
E098/ E099	Internal communication failure	The cable between the keyboard and the control board is not properly connected	Reinsert the cable between the keyboard and the control board
		Keyboard exception	Ask for technical support

Table 8-1-1 Table of troubleshooting countermeasures

8.2 Fault diagnosis and countermeasures

Serial number	Fault phenomenon	Possible cause	Solution
1	No display on power -up	The input power of the inverter is abnormal	Check whether the input power supply voltage is within the specified range
		The cable connecting the control board to the keyboard is in poor contact	Remove and reinsert the cable
		The internal components of the VFD are damaged	Ask for technical support
2	The motor does not rotate after the inverter runs	The motor is damaged or blocked	Replace motor or clear mechanical fault
		Motor wiring	Reconfirm that the connection between the inverter and the motor is correct.
		The cable between the driver board and the control board is in poor contact	Reinsert the cable and ensure that the cable is securely connected
		The internal components of the AC drive are damaged	Ask for technical support
3	DI terminal failure	Parameter setting error	Check and reset F5 group parameters
		External signal abnormality	Reconnect the external signal cable to rectify the external input fault
		Control board fault	Ask for technical support
4	AC driver interference	Carrier frequency is inappropriate	Appropriately reduce the carrier frequency (F0.16)
		Wrong grounding mode	The VFD and the motor are effectively grounded, while being separated from the grounding of the peripheral equipment
		The VFD and motor leads are too long	Install the output reactor or reduce the lead distance
5	Loud motor noise	Motor damage or mechanical failure	Replace motor or remove mechanical fault
		The carrier frequency is small	Appropriately increase carrier

Serial number	Fault phenomenon	Possible cause	Solution
			frequency or turn on random carrier function (F8.49)
6	Switch trip	The leakage switch or air switch is overloaded	Replace the air switch (without leakage) or replace the air switch with a larger capacity
		The input power of the inverter is abnormal	Check the input power supply and rule out short circuit
		The internal components of the VFD are damaged	Ask for Technical support

Table 8-2-1 Fault diagnosis countermeasure table

Chapter 9 Function code

F0 group basic function group

F0.00	Motor control mode	Factory default	1
	Setting range	0: Speed sensorless vector control (SVC) 1: V/F control	

0: Speed sensorless vector control

Refers to an open loop vector. Suitable for the usual high-performance control occasions, one inverter can only drive one motor. Such as machine tools, centrifuges, wire drawing machines, injection molding machines and other loads.

1: V/F control

It is suitable for occasions where the load requirement is not high or a VFD drags multiple motors, such as fans and pumps. It can be used for driving multiple motors with one VFD.

Tip: When selecting the vector control mode, the motor parameter identification process must be carried out. Only accurate motor parameters can give full play to the advantages of vector control.

F0.01	Command source selection	Factory default	0
	Setting range	0: Operation panel command channel 1: Terminal command channel 2: Serial port communication command channel	

Select the channel for the inverter control command.

Inverter control commands include: start, stop, forward, reverse, point and so on.

0: Operation panel command channel

The command is controlled by the key on the operation panel.

1: Terminal command channel

It is controlled by the multi-function input terminals FWD, REV, FJOG, RJOG, etc.

2: Serial port communication command channel

The host computer gives the running command control through the communication mode.

F0.02	Run time UP/DOWN benchmark	Factory default	1
	Setting range	0: Operating frequency 1: Setting frequency	

This function only effective for frequency source digital setting, in order to determine the setting frequency of UP/DOWN is current running frequency or current setting frequency.

F0.03	Main frequency source X choice	Factory default	4
	Setting range	0: Digital setting F0.08 (Adjustable terminal UP/DOWN, be not retained at power failure) 1: Digital setting F0.08 (Adjustable terminal UP/DOWN, be retained at power failure) 2: AI1 3: AI2 4: Keyboard potentiometer set 5: Set the terminal PULSE 6: Multi-speed instruction 7: Simple PLC 8: PID 9: Communication settings 10: AI3(Expansion module)	

Select the input channel for the main given frequency of the inverter. There are 10 main given frequency channels:

0: Digital setting (no memory) (Potentiometer and terminal UP/DOWN adjustable, power failure no memory) The initial value is F0.08 value of Digital Setting Preset Frequency. The set frequency value of the inverter can be changed by ▲/▼ key of the keyboard (or the UP and DOWN of the multi-function input terminal). No memory means that after the inverter power off, the set frequency value is restored to the initial value;

1: Digital setting (memory) (Potentiometer and terminal UP/DOWN adjustable, power failure memory) The initial value is F0.08 "digital setting preset frequency" value. The set frequency value of the inverter can be changed by ▲/▼ key of the keyboard (or the UP and DOWN of the multi-function input terminal). Memory means that when the inverter is powered on again after power failure, the set frequency is the set frequency before the last power failure

2: AI1 3: AI2 refers to the frequency determined by the analog input terminal. The standard unit provides two analog input terminals (AI1, AI2), of which AI1 is 0V to 10V voltage input, AI2 can be 0V to 10V voltage input, or 4mA to 20mA current input.

4: Potentiometer set by keyboard potentiometer to set the frequency

5: PULSE pulse setting (DI4) The frequency setting is set by the terminal pulse. Pulse given signal specifications: voltage range, frequency range 0kHz to 20kHz. Note: Pulse Settings can only be input from the multi-function input terminal DI4.

6: Multi-speed Select the multi-speed operation mode. The F5 "input terminal" and FD "multi-speed and PLC" parameters need to be set to determine the correspondence between a given signal and a given frequency.

7: Simple PLC Select simple PLC mode. When the frequency source is a simple PLC, the FD group "multi-speed and PLC" parameters need to be set to determine the given frequency.

8: PID selection process PID control. In this case, set the PID function of the F9 group. The operating

frequency of the inverter is the frequency value after PID action. For the meaning of PID set source, feed quantity and feedback source, please refer to the introduction of F9 group "PID Function".
9: Communication set means that the main frequency source is given by the host computer through communication.

F0.04	Auxiliary frequency source Y selection	Factory default	4
	Setting range	0: Numeric setting F0.08 (Terminal UP/DOWN can be change, Power failure does not remember. It is cleared after switching as a frequency source.) 1: Numeric setting F0.08 (Terminal UP/DOWN adjustable, be retained at power failure.) 2: AI1 given 3: AI2 given 4: Keyboard potentiometer set. 5: The terminal PULSE pulse is set. 6: Multi-speed instruction 7: Simple PLC 8: PID 9: Communication setting	

The secondary frequency source Y is used in the same way as the primary frequency source X when it is used as an independent frequency given channel (that is, the frequency source selected to switch from X to Y).

F0.05	The auxiliary frequency source Y range is selected during superposition	Factory default	0
	Setting range	0: Relative to the maximum frequency F0.10 1: Relative to the frequency source X	
F0.06	Auxiliary frequency source Y range in superposition	Factory default	100%
	Setting range	0% to 150%	

When the frequency source is selected as a frequency stack (F0.07 is set to 1, 3, or 4), it is used to determine the adjustment range of the auxiliary frequency source. F0.05 is used to determine the object relative to the range, if it is relative to the maximum frequency (F0.10), the range is a fixed value; If it is relative to the primary frequency source X, its range will change as the primary frequency source X changes.

F0.07	Frequency source stack selection	Factory default	0
	Setting range	LED bits: Frequency source selection 0: Primary frequency source 1: Results of primary and secondary operations 2: Master-auxiliary switching 3: Switch between primary frequency source and operation result 4: Switch between primary frequency source and operation result LED ten: combination mode selection 0: Primary + Auxiliary 1: Master-auxiliary 2: Maximum value of both 3: Minimum of both 4: Main x auxiliary	

The secondary frequency source is used in the same way as the primary frequency source X when it is used as an independent frequency given channel (that is, the frequency source selected is switched from X to Y). When the secondary frequency source is used as a superposition given (i.e., the frequency source selected is X+Y, X to X+Y switching, or Y to X+Y switching), there are the following special features:

When the auxiliary frequency source for digital or pulse potentiometer timing, preset frequency (F0.08) does not work, through the keyboard ▲/▼ key (or multi-function input terminal UP, DOWN) can be adjusted on the basis of the main given frequency.

When the auxiliary frequency source is given as an analog input (AI1, AI2) or a pulse input, 100% of the input setting corresponds to the auxiliary frequency source range (see F0.05 and F0.06 instructions). If you need to adjust up or down from the main given frequency, set the analog input to a range of.n% to +n%.

The frequency source is timed for pulse input, similar to analog quantity setting.

Tip: The secondary frequency source Y and the primary frequency source X Settings cannot be the same, that is, the primary and secondary frequency sources cannot use the same frequency given channel.

F0.08	Keyboard setting frequency	Factory default	50.00Hz
	Setting range	0.00 to Maximum frequency F0.10	

When the frequency source is selected “Numeric setting F0.08 (Terminal UP/DOWN Adjustable, power down memory) ", the function code value sets the initial value for the frequency number of the inverter.

F0.09	Running direction selection	Factory default	0
	Setting range	0: The same direction 1: The direction is reversed 2: Reverse prohibition	

By changing the function code, the steering of the motor can be changed without changing any other parameters, which is equivalent to the conversion of the rotation direction of the motor by adjusting any two lines of the motor (U, V, W).

Tip: The motor running direction will be restored to the original state after parameter initialization. For the system debugging is strictly prohibited to change the motor steering occasions with caution.

F0.10	Maximum output frequency	Factory default	50.00Hz
	Setting range	0.00 to 320.00Hz	

When F0.26=1, the upper limit of the maximum frequency is 1000Hz. When F0.26=2, the upper limit of the maximum frequency is 320Hz.

F0.11	Upper limit frequency source selection	Factory default	0
	Setting range	0: The number is F0.12 1: AI1 2: AI2 3: AI3(Expansion module) 4: Set the terminal PULSE 5: Communication given 6: Reserved 7: Keyboard potentiometer set	

Define the source of the upper limit frequency.

0: Number setting (F0.12).

1/2/3: Analog input channel. When setting an upper limit frequency with an analog input, 100% of the analog input setting corresponds to F0.12.

4: Set by terminal pulse.

5: Communication given 10000 corresponds to F0.12.

7: Set by keyboard potentiometer.

For example, in torque control, speed control is not effective. In order to avoid the "speed" of material breakage, the upper limit frequency can be set with the analog quantity. When the inverter runs to the upper limit frequency value, the torque control is invalid and the inverter continues to run at the upper limit frequency.

F0.12	Upper limit frequency	Factory default	50.00Hz
	Setting range	Lower frequency F0.14-Maximum frequency F0.10	
F0.13	Upper frequency bias	Factory default	0.00Hz
	Setting range	0.00Hz to Maximum frequency F0.10	

When the upper limit frequency is given by the analog quantity, this parameter is used as the bias quantity calculated by the upper limit frequency, and this upper limit frequency offset is added to the set value of the upper limit frequency of the simulation as the set value of the final upper limit frequency.

F0.14	Lower frequency	Factory default	0.00Hz
	Setting range	0.00Hz to Upper limit frequency F0.12	

When the VFD starts to run, it starts from the start frequency. If the given frequency is less than the lower limit frequency during operation, the VFD runs at the lower limit frequency, stops or runs at zero speed. You can set which mode of operation to use with F0.15.

F0.15	Lower frequency Operating mode	Factory default	0
	Setting range	0: Run at the lower limit frequency 1: Stop 2: Zero speed operation	

Select the operating state of the inverter when the set frequency is lower than the lower limit frequency. In order to avoid the motor running at low speed for a long time, you can use this function to choose to stop.

F0.16	Carrier frequency	Factory default	Model determination
	Setting range	0.5kHz to 16.0kHz	

This function regulates the carrier frequency of the inverter. By adjusting the carrier frequency, the motor noise can be reduced, the resonance point of the mechanical system can be avoided, and the interference of the line to the floor drain current and the VFD can be reduced.

When the carrier frequency is low, the higher harmonic component of the output current increases, the motor loss increases, and the motor temperature rise increases.

When the carrier frequency is high, the motor loss decreases and the motor temperature rise decreases, but the VFD loss increases, the VFD temperature rise increases and the interference increases.

The effect of adjusting the carrier frequency on the following performance:

Carrier frequency	Low → High
Motor noise	High → Low
The output current waveform	Worse → Better
Temperature rise in electric motors	High → Low
VFD temperature rise	Low → High
Leak current	Low → High
External radiation interference	Low → High

F0.17	Carrier PWM baud selection	Factory default	1010
	Setting range	Bits: Select PWM mode 0: Automatic switching; 1: 7 wave; 2: 5 wave; 3: SPWM; LED ten: Carrier is associated with the output frequency 0: Independent of the output frequency 1: Related to the output frequency LED hundred: random PWM depth 0: Off 1-8: Open and adjust the depth LED kilobit: Over modulation option 0: Off 1: On	
F0.18	Acceleration time 1	Factory default	Model determination
	Setting range	0.0s to 6500.0s	
F0.19	Deceleration time1	Factory default	Model determination
	Setting range	0.0s to 6500.0s	

One place: Select PWM mode

VFD can choose 5-section wave or 7-section wave, the 5-section wave converter has little heat, and the 7-section wave motor has little noise. When the bit is 0, 7 waves are generated at low frequency and 5 waves are generated at high frequency. At 1 o 'clock, the whole wave is 7 stages, and at 2 o'clock, the whole wave is 5 stages.

Tens place: The carrier is associated with the output frequency

When the output frequency is low, reducing the PWM carrier can increase the low frequency starting torque and reduce the electromagnetic interference during starting. When the bit is 1, the program automatically reduces the PWM carrier when the output frequency is low.

Hundreds palce: Random PWM depth

In order to make the motor noise spectrum flatter, you can turn on the random PWM function, after

the function is turned on, the PWM carrier is no longer a fixed value, but fluctuates around the F0.16 set carrier. When the bit is not 0, the random PWM function works. The larger the value, the wider the fluctuation range and the flatter the noise spectrum. It should be noted that after opening the random carrier, the electromagnetic noise of the motor will not necessarily be reduced, and the actual noise perception varies from person to person.

Thousands place: Over modulation option

The over modulation function can increase the maximum output voltage of the inverter, but it also makes the current distortion more obvious. When the bit is 1, the over modulation function is enabled.

Acceleration time refers to the time required for the inverter to accelerate from zero frequency to the reference frequency of acceleration and deceleration (determined by F0.24), as shown in t1 in Figure 9-0-1.

Deceleration time refers to the time required for the VFD to decelerate from the reference frequency of acceleration and deceleration (determined by F0.24) to the zero frequency, see t2 in Figure 9-0-1.

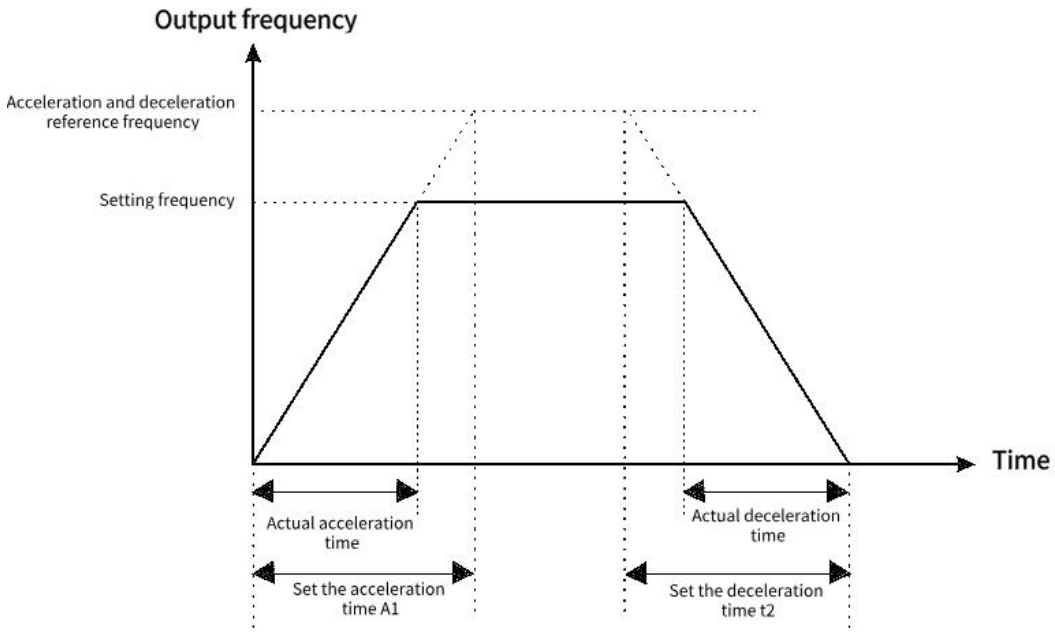

Figure 9-0-1 Acceleration and deceleration time

Note the difference between the actual acceleration and deceleration time and the set acceleration and deceleration time.

There are four groups of acceleration and deceleration time selection

Group 1: F0.18, F0.19;

Group 2: F8.03, F8.04;

Group 3: F8.05, F8.06;

Group 4: F8.07, F8.08.

The acceleration and deceleration time can be selected through the multifunctional digital input terminals (F5.00 to F5.03).

F0.20	Parameter initialization	Factory default	0
	Setting range	0: No opreration 1: Restore factorydefault (Do not restore motor parameters) 2: Clear the record information 3: Restore factory default (Restore motor parameters)	

1: Restore factory settings, excluding motor parameters

2: Clear recorded information, clear the VFD fault record, cumulative running time (F7.09), cumulative power-on time (F7.13),

Cumulative power consumption (F7.14).

3: Restore all factory settings, including motor parameters, and clear the recorded information at the same time.

F0.23	Unit of acceleration and deceleration time	Factory default	1
	Setting range	0: 1s 1: 0.1s 2: 0.01s	

This function is used to determine all acceleration and deceleration time units.

Note that when the value is modified, the actual acceleration and deceleration time will also change accordingly (the decimal point position changes, the actual display number remains unchanged), Therefore, it is necessary to adjust the various acceleration and deceleration Settings according to the situation.

Note the following function codes: F0.18, F0.19, F8.01, F8.02, F8.03, F8.04, F8.05, F8.06, F8.07, F8.08.

F0.24	Acceleration and deceleration time reference frequency	Factory default	0
	Setting range	0: Maximum frequency (F0.10) 1: Set the frequency 2: 100 Hz	

Define the frequency range corresponding to the acceleration and deceleration time. See Figure 9-0-1 Acceleration and deceleration time.

F0.25	Fan control	Factory default	01
	Setting range	One place: start/stop control 0: The fan runs after the inverter is powered on 1: Shutdown is related to temperature, and operation is running 2: Stop The fan stops and the operation is temperature-related Tens place: Enables the speed adjustment function 0: Off 1: Enable	

1: Start-stop control: After startup, the device runs. If the temperature is above 50 degrees when stopped, it continues to run.

2: Temperature control: More than 50 degrees to start operation

Tens place: Enables the speed adjustment function

Speed control: Below 45°C: Operate at 50% speed; From 45°C to 50°C: Operate at 75% speed; At 50°C and above: Operate at 100% speed.

F0.26	Frequency command decimal point	Factory default	2
	Setting range	1: 1 decimal places 2: 2 decimal places	

This parameter is not restored when restoring factory defaults.

F0.27	Modulation ratio coefficient	Factory default	100.0%
	Setting range	10.0 to 150.0%	

This parameter is the upper limit of the modulation ratio. The lower the modulation ratio, the lower the maximum output voltage; The higher the modulation ratio, the more obvious the current distortion during over modulation.

F1 group start stop control

F1.00	Start-up operation mode	Factory default	0
	Setting range	LED ones place: Boot mode 0: Start directly from the start frequency 1: Start after speed tracking and direction judgment 2: The asynchronous machine starts with pre-excitation	

0: Direct startup

1: Start after speed tracking and direction judgment

The inverter first detects the steering and speed of the motor, and then starts according to the real-time speed. It is suitable for instantaneous power failure and restart of large inertia load or smooth restart of rotating equipment. Set accurate F2 motor parameters for better speed tracking and restart performance.

2: The asynchronous machine starts with pre-excitation

Pre-excitation current, time and DC braking current, time share function code. If F1.09 pre-start braking time is set to 0, start from the start frequency. When the value is not set to 0, pre-excitation is implemented before startup to improve the dynamic response speed.

F1.01	Speed tracking mode	Factory default	0
	Setting range	LED tens place: speed tracking direction 0: One to the stop direction 1: One to the starting direction 2: Automatic search	

Tens place: speed tracking direction

This parameter determines the direction from which to start speed tracking. Please set it correctly according to the actual situation. If the setting is wrong, the startup may fail. In the case of not knowing the starting direction, you can set to automatic search, the program will automatically judge the starting direction, but the search time will be lengthened accordingly.

F1.02	Speed tracking time	Factory default	1.00s
	Setting range	0.01 to 60.00s	

If the speed tracking time is too short, the tracking may end without tracking the actual frequency. At F1.01=002X, if the search direction is wrong, two searches will be performed and the actual search time will be doubled.

F1.03	Speed tracking current loop gain	Factory default	10.00
	Setting range	0.00 to 10.00	
F1.04	RPM tracking speed gain	Factory default	2.00
	Setting range	0.01 to 10.00	

The excitation search current loop gain and velocity loop gain are determined.

F1.05	Speed tracking current	Factory default	150%
	Setting range	50% to 200%	

Set the excitation search current size.

F1.06	Starting frequency	Factory default	0.00Hz
	Setting range	0.0s to 60.00Hz	
F1.07	Startup frequency duration	Factory default	0.0s
	Setting range	0.0 to 50.0s	

In order to ensure the torque during startup, please use the appropriate startup frequency.In addition, the magnetic flux is established when waiting for the motor to start, so that the starting frequency is maintained for a certain time before accelerating.The starting frequency is maintained for a certain time before accelerating. The startup frequency F1.06 is not limited by the lower frequency. If the frequency given less than startup frequency, the AC driver can no be started, and it will standby state.The startup frequency holding time is not work during forward/reverse switching. The holding time is not included in the acceleration time, but is included in the running time of the simple PLC.

F1.08	Braking current before starting	Factory default	80.0%
	Setting range	0.0 to 150.0%	
F1.09	Braking time before starting	Factory default	0.0s
	Setting range	0.0 to 60.0s	

Starting DC braking is generally used to stop the motor completely before starting.

If the starting mode is starting after the DC braking, the AC driver will execute the DC braking as the setting value, and it will start running after the setting starting braking time value. It will direct start without DC braking if the setting DC braking time is 0. The braking power is greater with the greater DC braking current.

F1.10	Shutdown mode	Factory default	0
	Setting range	0: Slow down stop 1: Free stop	

0: Slow down stop

After the stop command is effective, the inverter reduces the output frequency according to the deceleration mode and the defined acceleration and deceleration time, and stops after the frequency drops to 0.

1: Free stop

When the stop command is valid, the inverter terminates output immediately. The load stops freely according to mechanical inertia.

F1.11	Stop DC braking start frequency	Factory default	0.00Hz
	Setting range	0.00Hz to Maximum frequency F0.10	
F1.12	Stop DC braking wait time	Factory default	0.0s
	Setting range	0.0s to 100.0s	
F1.13	Stop DC braking current	Factory default	80.0%
	Setting range	0% to 150%	
F1.14	Stop DC braking duration	Factory default	0.0s
	Setting range	0.0s to 100.0s	

DC braking start frequency: slow down the stopping process. When the output frequency is less than this frequency, the DC braking process starts to stop.

Dc braking waiting time: When the output frequency is reduced to F1.11 DC braking starting frequency, the inverter stops output and starts timing. After the delay time set by F1.12, DC braking starts again. Used to prevent over current failure caused by DC braking at high speeds.

Stop DC braking current: refers to the amount of DC braking applied. The greater the value, the stronger the DC braking effect.

Dc braking time: the time added to the DC braking amount. When this value is 0, it means that there is no DC braking process, and the inverter stops according to the set deceleration stop process.

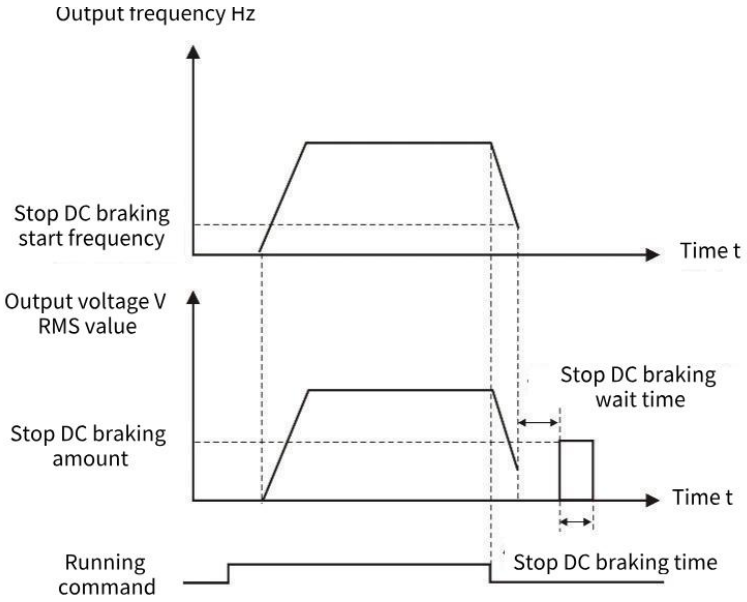

Figure 9-1-1 Shutdown DC braking diagram

F1.16	Energy consumption brake action voltage	Factory default	Model-based setting
	Setting range	115.0% to 140.0%	

Set the brake resistance operating voltage. When the relative value of the bus voltage is higher than this value, the brake resistance starts braking.

F1.17	Magnetic flux braking gain	Factory default	80%
	Setting range	10% to 500%	
F1.18	Magnetic flux braking operating voltage	Factory default	Model-based setting
	Setting range	110% to 150%	
F1.19	Flux brake limiting	Factory default	20%
	Setting range	0 to 200%	

When the motor decelerates the feedback energy, opening the flux brake can consume the feedback energy on the motor, so as to achieve rapid deceleration of the motor. This function is only effective in asynchronous motor VF control, and turning on this function will correspondingly increase motor loss and motor temperature rise.

Magnetic flux braking gain: The strength of magnetic flux braking, the greater the parameter, the greater the magnetic flux braking current.

Magnetic flux braking action voltage: When the relative value of the bus voltage is higher than this value, magnetic flux braking begins to work.

Flux brake limiting: The upper limit of the flux brake voltage, which may cause the output current of the inverter to be too high.

F1.20	Acceleration and deceleration selection	Factory default	0
	Setting range	0: Straight line 1: S curve	

0: Straight line, generally suitable for general purpose load.

1: S-curve, S-type acceleration and deceleration curve is mainly provided for the load that needs to slow down noise and vibration during acceleration and deceleration, reduce start-stop impact, or decrease torque at low frequency, and short-time acceleration at high frequency. If an over current or over load failure occurs at startup, reduce the set value of [F1.21].

F1.21	S-curve initial acceleration rate	Factory default	50.0%
	Setting range	20.0%-100.0%	
F1.22	S-curve initial deceleration rate	Factory default	50.0%
	Setting range	20.0%-100.0%	

S-curve Initial acceleration rate: The rate at which the acceleration process begins to increase in frequency. The smaller the initial acceleration rate, the more curved the S-curve of the acceleration

process, whereas the larger the initial acceleration rate, the closer the acceleration S-curve to a straight line. To make the acceleration curve softer, you can reduce the initial acceleration rate and extend the acceleration time.

F1.23	Zero speed holding torque	Factory default	0
	Setting range	0.0% to 150.0%	

Set the output torque of the inverter at zero speed. If the torque setting is large or the duration is long, attention should be paid to the heat dissipation of the motor.

F1.24	Zero speed holding torque time	Factory default	Model setting
	Setting range	0.0 to 6000.0s If the value is set to 6000.0s, the value remains unchanged without time limitation	

Set the torque holding time when the inverter is running at zero speed. The timing starts when the operating frequency is 0Hz, and the inverter stops output after the time reaches the set zero-speed holding torque time. Among them, the effective timing value is 0 to 5999.9s, and the parameters are set in the effective timing value of the VFD at the set time. After the time is full, the VFD terminates and maintains the zero-speed torque.

If the parameter setting is equal to 6000.0s, the VFD is not timed and defaults to long-term validity, and the zero-speed torque holding is terminated only after the stop command is given or the non-zero operating frequency is given.

Setting an appropriate zero-speed holding torque time can effectively achieve energy saving and protect the motor.

F1.25	Start pre-excitation time	Factory default	0.20
	Setting range	0.00 to 60.00s	

This parameter is only valid if F0.00=0, in the open loop vector start, appropriate pre-excitation can make the start smoother.

F1.26	Shutdown frequency	Factory default	0.00Hz
	Setting range	0.00-60.00Hz	

This function is defined as the frequency of the minimum output of the inverter, less than this frequency, the output of the inverter stops.

F1.27	Power failure restart action selection	Factory default	0
	Setting range	0: Invalid 1: Valid	

0: Invalid VFD power after power failure must receive the operation instruction before running.

1: Valid If the inverter is in operation before the power is cut off, the inverter will automatically start after the power is restored and after the set waiting time (set by [F1.28]). During the waiting time of power failure and restart, the inverter does not accept the running command, but if the stop command is entered during this period, the inverter will release the restart state.

F1.28	Power failure restart waiting time	Factory default	0.50s
	Setting range	0.00 to 120.00s	

When [F1.27] setting is effective, After the inverter power supply, it will wait for the time set in [F1.28] to start running.

F1.29	Select the terminal running protection	Factory default	11
	Setting range	LED units digital: Select the terminal run instruction when powering on. 0: The terminal running instruction is invalid during power-on. 1: Terminal running instructions are valid during power-on. LED tens place: Run instruction given channel switch terminal run instruction selection. 0: The terminal running instruction is invalid. 1: The terminal instruction is valid when the terminal is cut in.	

When terminal operation is selected, the initial wiring state of peripheral devices may affect the safety of the device. This parameter provides protective measures for terminal operation.

LED units place: Select the terminal run command when powering on

Select the mode of executing the operation instruction when the inverter is powered on with the terminal running signal in effect.

0: The terminal instruction is invalid during power-on. The terminal control stops before the power is started.

1: When the terminal is powered on, the terminal control instruction is valid.

LED tens place: Terminal run instruction selection when switching to terminal instruction from other instruction channels

Select the mode of running the instruction channel to switch to the terminal instruction mode and execute the running instruction when the terminal running signal is valid.

0: The terminal running instruction is invalid when cutting in. The terminal control stops before starting.

1: When the terminal instruction is effective, the terminal control can be started directly.

F2 group motor parameters

F2.00	Motor type	Factory default	0
	Setting range	0: Asynchronous motor (AM) 1: Permanent magnet synchronous motor (PM) 2: Single-phase asynchronous motors (Only VF control is supported)	

2 Single-phase asynchronous motor refers to a single-phase motor without phase shift capacitance, U terminal is connected to the main winding, V terminal is connected to the common end, and W terminal is connected to the auxiliary winding.

F2.01	Rated power of motor	Factory default	Model determination
	Setting range	0.1kW to 400.0kW	
F2.02	Rated voltage of motor	Factory default	Model determination
	Setting range	1V to 440V	
F2.03	Rated current of motor	Factory default	Model determination
	Setting range	0.1A to 2000.0A	
F2.04	Rated power of motor	Factory default	Model determination
	Setting range	0.00Hz-Maximum frequency F0.10	
F2.05	Rated motor speed	Factory default	Model determination
	Setting range	1rpm to 65000rpm	

✎**Note:**

1. Please set according to the nameplate parameters of the motor.
2. The excellent control performance of vector control requires accurate motor parameters, and accurate parameter identification comes from the correct setting of the rated parameters of the motor.
3. In order to ensure the control performance, please configure the motor according to the inverter standard adaptation motor, if the motor power and the standard adaptation motor gap is too large, the control performance of the inverter will be significantly reduced.

F2.06	Motor stator resistance	Factory default	Model determination
	Setting range	0.001Ω to 65.000Ω	
F2.07	Motor rotor resistance	Factory default	Model determination
	Setting range	0.001Ω to 65.000Ω	
F2.08	Motor fixed rotor inductance	Factory default	Model determination
	Setting range	0.1 to 6500.0mH	
F2.09	Mutual inductance of motor fixed rotor	Factory default	Model determination
	Setting range	0.1 to 6500.0mH	
F2.10	Motor no-load current	Factory default	Model determination

	Setting range	0.1 to 650.0A

After the automatic tuning of the asynchronous motor is completed normally, the set values of the asynchronous motor parameters (F2.06 to F2.10) are automatically updated.

After changing the motor rated power F2.01 each time, the VFD F2.06 to F2.10 parameter values will automatically restore the default standard motor parameters, if running in vector mode, please re-tune.

F2.11	Tuning selection	Factory default	0
	Setting range	0: No operation is performed 1: Static tuning 1 2: Full tuning 3: Static tuning 2 (AM calculated Lm)	

✎**Note:** Before tuning, you must set the correct motor type and rating parameters (F2.00 to F2.05).

0: No operation is performed, that is, tuning is disabled.

1: Static tuning 1, suitable for the motor and the load is not easy to come off and can not be rotated tuning occasions, static tuning learning asynchronous motor F2.05-F2.10 or synchronous motor F2.22 to F2.25 parameters, wherein synchronous motor back potential is calculated according to F2.01 and F2.03, if the motor power or current and the actual difference is large, Calculations may not be accurate.

Action description: Set the function code to 1, and press the RUN key to confirm, the inverter will perform static tuning.

2: Complete tuning, in order to ensure the dynamic control performance of the inverter, please select rotary tuning, rotary tuning motor must be disconnected from the load (no-load). After selecting rotary tuning, the inverter first performs static tuning, and after static tuning, the motor accelerates to 80% of the rated frequency of the motor, and maintains it for a period of time, and then decelerates and stops, and the rotary tuning ends.

Action description: Set the function code to 2, and press the RUN key to confirm, the inverter will perform rotation tuning.

3: Static tuning 2, different from static tuning 1, the tuning needs to manually input the asynchronous motor no-load current F2.10, the program will calculate the mutual inductance F2.09 according to the current, the other is the same as static tuning 1.

Action description: Set the function code to 3, and press the RUN key to confirm, the inverter will perform static tuning.

Note: Tuning can only be effective in keyboard control mode, acceleration and deceleration time is recommended to use the factory default.

F2.12	G/P Machine type	Factory default	Model determination
	Setting range	0: G type machine; 1: P-type machine	

This parameter can only be used to view factory models.

1: Constant torque load for specified rated parameters.

2: Suitable for the specified rated parameters of the variable torque load (fan, pump load).

F2.13	Single phase asynchronous motor turns ratio	Factory default	100%
	Setting range	10 to 200%	

U terminal main winding, V terminal auxiliary winding, W common end, this parameter is used to set the ratio of the number of turns between the main winding and the auxiliary winding of the single-phase motor.

F2.14	Current calibration coefficient of single-phase motor	Factory default	120%
	Setting range	50 to 200%	

The single-phase motor has main and auxiliary windings, and the three-phase output current is unbalanced, so the output current displayed by the inverter needs to be multiplied by the coefficient of the resultant current.

F2.15	Number of motor poles	Factory default	4
	Setting range	2 to 48	

Change F2.04 or F2.05, the program will automatically calculate the number of motor poles, in general, do not need to set this parameter.

F2.22	Stator resistance of synchro	Factory default	Model determination
	Setting range	0.001 to 65.000(0.001Ohm)	
F2.23	Synchro d-axis inductance	Factory default	Model determination
	Setting range	0.01mH-655.35mH	
F2.24	Synchro Q-axis inductance	Factory default	Model determination
	Setting range	0.01mH to 655.35mH	
F2.25	Synchro back electromotive force	Factory default	Model determination
	Setting range	0.1V to 1000.0V	

After the automatic tuning of the synchronous motor is completed, the set values of the synchronous motor parameters (F2.22 to F2.25) are automatically updated.

After changing the rated motor power F2.01 each time, the F2.22 to F2.25 parameter values of the inverter will automatically restore the default standard motor parameters, please re-tune.

F2.28	High frequency injection voltage	Factory default	20.0%
	Setting range	0.1% to 100.0%	

The current injected when the synchronous motor learns the inductance of DQ axis by high frequency injection.

F2.29	Back potential identification current	Factory default	50.0%
	Setting range	0.1% to 100.0%	

The output current of the inverter is the size when the synchronous motor dynamically adjusts to learn the back potential.

F2.31	Asynchronous no-load current per unit value	Factory default	Model determination
	Setting range	0.1%	
F2.32	Per unit asynchronous stator resistance	Factory default	Model determination
	Setting range	0.01%	
F2.33	Asynchronous rotor resistance per unit value	Factory default	Model determination
	Setting range	0.01%	
F2.34	Asynchronous mutual inductance per unit value	Factory default	Model determination
	Setting range	0.1%	
F2.35	Asynchronous leakage sensing per unit value	Factory default	Model determination
	Setting range	0.01%	
F2.36	Per unit value of asynchronous leakage sensing coefficient	Factory default	Model determination
	Setting range	0.01%	
F2.37	Synchronous stator resistance per unit value	Factory default	Model determination
	Setting range	0.01%	
F2.38	Per unit value of synchronous D-axis inductance	Factory default	Model determination
	Setting range	0.01%	
F2.39	Synchronous Q-axis inductance per unit value	Factory default	Model determination
	Setting range	0.01%	
F2.40	Back electromotive force of synchronous motor	Factory default	Model determination
	Setting range	0.1V	

The per unit value of the motor parameters is used for the actual program calculation. After learning or parameter recovery, the actual change is F2.31-F2.40. F2.06-F2.10 and F2.22-F2.25 are calculated from the per unit value, so only F2.31-F2.40 values can be modified, F2.06-F2.10 and F2.22-F2.25 are only used to display and cannot be changed.

F3 vector control parameters

The F3 group function code is only valid in vector control mode, that is, it is valid when F0.00 = 0 and invalid when F0.00 = 1.

F3.00	ASR (Speed loop) proportional gain 1	Factory default	0.20
	Setting range	0.00 to 1.00	
F3.01	ASR(Velocity ring) integration time 1	Factory default	0.20
	Setting range	0.01 to 10.00s	
F3.03	ASR filtering time 1	Factory default	0.000s
	Setting range	0.000 to 0.100s	
F3.04	ASR switching frequency 1	Factory default	5.00Hz
	Setting range	0.00 to 50.00Hz	
F3.05	ASR(Speed loop) proportional gain 2	Factory default	0.20
	Setting range	0.00 to 1.00	
F3.06	ASR(Velocity loop) integration time 2	Factory default	0.20
		0.01 to 10.00s	
F3.08	ASR filtering time 2	Factory default	0.000s
	Setting range	0.000 to 0.100s	
F3.09	ASR switching frequency 2	Factory default	10.00Hz
	Setting range	0.00 to 50.00Hz	

F3.00 and F3.01 are PI adjustment parameters when the operating frequency is less than switching frequency 1 (F3.04).

F3.05 and F3.06 are PI adjustment parameters whose operating frequency is greater than switching frequency 2 (F3.09).

The PI parameters of the frequency segment between switching frequency 1 and switching frequency 2 are linear switching of the two groups of PI parameters, as shown in the figure below:

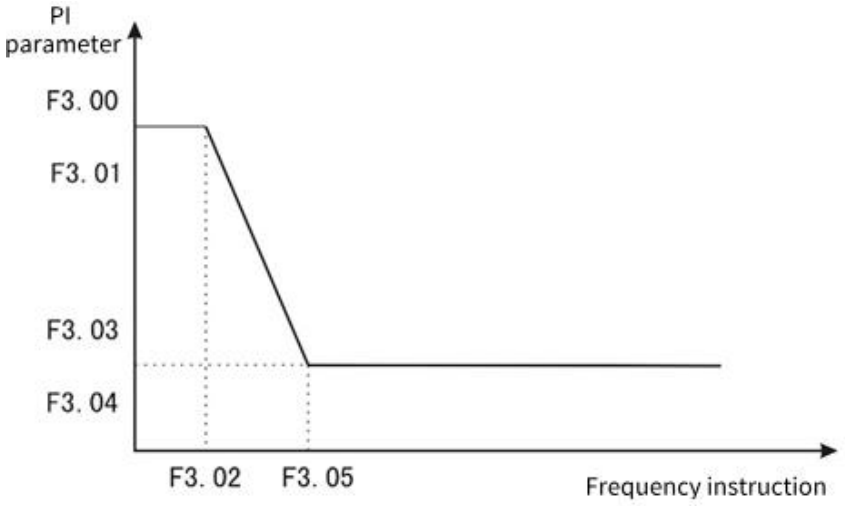

Figure 9-3-1 PI parameter diagram

The speed dynamic response characteristic of vector control can be adjusted by setting the proportional coefficient and integration time of the speed regulator. Proportional increase
If the integration time is reduced, the dynamic response of the speed loop can be accelerated. The system may oscillate if the proportional gain is too large or the integration time is too small.
Recommended adjustment method:
If the Factory parameters cannot meet the requirements, fine-tune the Factory default parameters: first increase the proportional gain to ensure that the system does not oscillate; Then the integration time is reduced so that the system has both faster response characteristics and smaller overshoot.
Note: Setting the PI parameter incorrectly may result in excessive speed overshoot. Even overvoltage failure occurs when overshoot falls back.

F3.02	Loss of velocity protection value	Factory default	0ms
	Setting range	0 to 5000ms	

In order to prevent motor speed, when the motor speed is detected to have a large deviation from the target speed and maintain F3.02 time or more, the inverter alarms.

F3.03	ASR Filtering time 1	Factory default	0.000s
	Setting range	0.000 to 0.100s	
F3.08	ASR Filtering time 2	Factory default	0.000s
	Setting range	0.000 to 0.100s	

It is used to set the filtering time of the speed loop feedback. When the output frequency is below F3.04, the filtering time is F3.03. When the value is higher than F3.04, the filtering time is F3.08.

F3.10	Slip compensation coefficient	Factory default	100%
	Setting range	0 to 250%	

This parameter is used to adjust the slip frequency compensation for high performance vector control. When fast response and high speed accuracy are required, proper adjustment of this parameter can improve the dynamic response speed of the system and eliminate the steady-state speed error.

F3.11	Maximum electric torque	Factory default	160.0%
	Setting range	0.0 to 250.0%	
F3.12	Maximum generating torque	Factory default	160.0%
	Setting range	0.0 to 250.0%	

When speed control is set, the maximum electric torque in the electric state and the maximum electric torque in the generation state are respectively.

F3.16	Current loop D axis proportional gain	Factory default	1.0
	Setting range	0.1 to 10.0	
F3.17	Current loop D axis integral gain	Factory default	1.0
	Setting range	0.1 to 10.0	
F3.18	Current loop Q axis proportional gain	Factory default	1.0
	Setting range	0.1 to 10.0	
F3.19	Current loop Q axis integral gain	Factory default	1.0
	Setting range	0.1 to 10.0	

Set PI parameter of current loop in vector control of asynchronous machine and synchronous machine. When the vector control, if the speed, current oscillation, instability phenomenon, can be appropriately reduced each gain to achieve stability; At the same time, increasing each gain helps to improve the dynamic response of the motor.

F3.20	D-axis feed forward gain	Factory default	50.0%
	Setting range	0.0 to 200.0%	
F3.21	Q-axis feed forward gain	Factory default	50.0%
	Setting range	0.0 to 200.0%	

The current loop has been decoupled, and the feed forward can accelerate the response speed of the current loop. Increasing feed forward can make the response faster, but it is generally not recommended to exceed 100.0%.

F3.22	Optimize the current loop bandwidth	Factory default	2.00ms
	Setting range	0.0 to 99.99ms	
F3.23	Current loop control word	Factory default	0
	Setting range	0 to 65535	

This parameter is used to set the current ring.

F3.24	Weak magnetic control current upper limit	Factory default	50%
	Setting range	0 to 200%	
F3.25	Weak magnetic control feed forward gain	Factory default	0%
	Setting range	0 to 500%	
F3.26	Weak magnetic control proportional gain	Factory default	500
	Setting range	0 to 9999	
F3.27	Weak magnetic control integral gain	Factory default	1000
	Setting range	0 to 9999	

When the asynchronous motor and permanent magnet synchronous motor work in vector mode, the weak magnetic acceleration can be carried out. F3.24 sets the upper limit of demagnetization current, and the weak magnetic function is turned off when the time phase is set to 0. F3.25 to F3.27 Set the parameters of magnetic weakening control. When instability occurs during magnetic weakening, adjust the parameters for debugging.

F3.28	MTPA gain	Factory default	0.0%
	Setting range	0 to 500.0%	
F3.29	MTPA filtering time	Factory default	100ms
	Setting range	0 to 999.9ms	

MTPA function is to optimize the excitation strategy of permanent magnet synchronous motor to maximize motor output/motor current; When the difference between D and Q axis inductance of permanent magnet motor is large, adjusting [F3.28] can obviously change the motor current under the same load. Adjustment [F3.29] can improve the stability of motor operation.

F3.30	Magnetic flux compensation coefficient	Factory default	100%
	Setting range	0 to 500%	
F3.31	Open-loop vector observer gain	Factory default	1024
	Setting range	0 to 9999	
F3.32	Open loop vector observation filtering time	Factory default	20ms
	Setting range	1 to 100ms	
F3.33	The open-loop vector compensates the starting frequency	Factory default	1.0%
	Setting range	0 to 100.0%	
F3.34	Open loop vector control word	Factory default	4
	Setting range	0 to 9999	

This parameter is used to set the parameter of flux observation when asynchronous motor or synchronous motor is controlled by open loop vector.

F3.35	Synchronous open loop start mode	Factory default	1
	Setting range	0: Direct startup 1: Start at an Angle	

It is used to set the starting mode when the synchronous motor is open loop vector, 0 starts DC first, pulls the permanent magnet to the set position and then starts; 1 Find the permanent magnet position before starting.

F3.36	DC pull in time	Factory default	500ms
	Setting range	1ms to 9999ms	

Synchronous motor start DC pull in time, time is too short may appear permanent magnet has not completely pulled to the set position on the end of the possibility, may appear not smooth start or even start failure.

F3.37	Synchronous open loop vector low frequency boost	Factory default	20.0%
	Setting range	0 to 100.0%	
F3.38	Synchronous open loop vector high frequency boost	Factory default	0.0%
	Setting range	0 to 100.0%	
F3.39	Low frequency boost to maintain frequency	Factory default	10.0%
	Setting range	0 to 100.0%	
F3.40	Low frequency increases cutoff frequency	Factory default	20.0%
	Setting range	0 to 100.0%	

At low frequency, the D-axis current can be appropriately increased to improve the accuracy of flux observation and starting torque. When the relative frequency (relative to the rated frequency) is lower than F3.39, the D-axis current feed is set to F3.37; When the relative frequency is higher than F3.38, the given current of D-axis is F3.38. When the relative frequency is before F3.38 and F3.39, the D-axis current is given between F3.39 and F3.40. When the synchronous motor is running at high frequency under no-load or light load (relative frequency is higher than F3.40), the D-axis current F3.38 can be set appropriately to reduce the current jitters.

F3.46	Speed/torque control mode	Factory default	0
	Setting range	0: Speed control 1: Torque control	

1: Torque control is only effective when the open loop vector is controlled, and VF control is invalid.

F3.47	Torque given channel selection	Factory default	0
	Setting range	0: F3.48 is set. 1: AI1×F3.48 2: AI2×F3.48 3: AI3×F3.48 4: PUL×F3.48 5: Keyboard potentiometer ×F3.48 6: RS485 communication ×F3.48	

Torque setting adopts relative value, 100.0% corresponds to the rated torque of the motor. The Setting range is 0% to 200.0%, indicating that the maximum torque of the inverter is 2 times the rated torque of the inverter.

0: Keyboard number given by function code F3.48.

1: AI1 × F3.48 Set by AI1 terminal voltage analog input.

2: AI2 × F3.48 Set by AI2 terminal voltage or current analog input.

3: AI3 × F3.48 is set by the AI3 terminal current input analog.

4: PUL × F3.48 is set by the high-speed pulse input from the PUL terminal.

5: Keyboard potentiometer set × F7.01 by the keyboard potentiometer analog setting.

6: RS485 communication set x F3.48 is set by RS485 serial port communication.

✎**Note:** If the value of 1 to 6 is 100%, it corresponds to the value set by the function code F3.48.

F3.48	Torque keyboard numeric setting	Factory default	100.0%
	Setting range	0 to 200.0%	

When the function code F3.47 = 0, the torque is set by the function code F3.48.

F3.49	Torque direction selection	Factory default	00
	Setting range	Units: torque direction setting 0: The torque direction is positive 1: The torque direction is negative Tens place: Torque reversing setting 0: Torque reversal is allowed 1: Torque reversal is prohibited	

LED units place: Torque direction setting

0: The torque direction is positive inverter running.

1: The torque direction is negative inverter reversal operation.

LED tens place: Torque reversing setting

0: Allows the torque converter to keep running in one direction.

1: The torque reversal inverter can be run in both positive and negative directions.

✎**Note:** The running direction will not be affected by the F0.16 setting during torque control, and only one direction will be maintained when starting with the keyboard FWD or REV keys.

F3.50	Upper limit of output torque	Factory default	150.0%
	Setting range	F3.51 to 200.0%	
F3.51	Lower limit of output torque	Factory default	0%
	Setting range	0 to F3.50	

Output torque upper limit: Used to set the output torque upper limit for torque control.

Lower output torque limit: Used to set the lower output torque limit during torque control.

F3.52	Torque control forward speed limit selection	Factory default	0.10s
	Setting range	0: F3.54 is set 1: AI1×F3.54 2: AI2×F3.54 3: AI3×F3.54 4: PUL×F3.54 5: Keyboard potentiometer given ×F3.54 6: RS485 communication given ×F3.54	

It is used to set the maximum forward operating frequency limit of the inverter under the torque control mode.

When the converter torque control, if the load torque is less than the motor output torque, the motor speed will continue to rise, in order to prevent mechanical system accidents such as racing, it is necessary to limit the maximum motor speed during torque control.

0: Keyboard number given by function code F3.54.

1: AI1 × F3.54 Set by AI1 terminal voltage analog input.

2: AI2 × F3.54 Set by AI2 terminal voltage analog input.

3: AI3 × F3.54 is set by the AI3 terminal current input analog.

4: PUL × F3.54 is set by the high-speed pulse input from the PUL terminal.

5: Keyboard potentiometer set × F3.54 by the keyboard potentiometer analog setting.

6: RS485 communication Set × F3.54 is set by RS485 serial port communication.

Note: If 100% is set in 1 to 6 above, it corresponds to the value set in function code [F3.54].

F3.53	Torque control reversal speed limit selection	Factory default	0
	Setting range	0: F3.55 is set 1: AI1╳F3.55 2: AI2╳F3.55 3: AI3╳F3.55 4: PUL╳F3.55 5: Keyboard potentiometer given ╳F3.55 6: RS485 communication given ╳F3.55 7: Purchase card	

F3.53 is set the same as F3.52, F3.53 is used to limit the speed when reversing, and the corresponding number is given the function code F3.55.

F3.54	Torque control positive maximum speed limit	Factory default	50.00Hz
	Setting range	0.00 to Upper limit frequency	
F3.55	Torque control reversal maximum speed limit	Factory default	50.00Hz
	Setting range	0.00 to Upper limit frequency	

When function codes F3.52 and F3.53 are set to 0, the maximum speed limit is set by F3.54 and F3.55.

F3.56	Speed/torque switching delay	Factory default	0.01s
	Setting range	0.00 to 10.00s	

When the speed/torque mode is switched through terminals DI1 to DI4 or F3.46, the switch can be performed only after the delay time set in F3.56.

F3.57	Torque acceleration time	Factory default	0.01s
	Setting range	0.00 to 10.00s	
F3.58	Torque deceleration time	Factory default	0.01s
	Setting range	0.00 to 10.00s	

In the torque operation mode, the difference between the output torque of the motor and the load torque determines the speed change rate of the motor and the load. Therefore, electricity

The speed of the machine may change rapidly, causing problems such as noise or mechanical overshoot; By setting the torque to control the acceleration and deceleration time, the motor speed can be gently changed. The torque acceleration and deceleration time is based on 2 times the rated torque of the inverter (200%).

F3.59	Forward and reverse torque dead zone time	Factory default	0.00s
	Setting range	0.00 to 650.00s	

Used for the transition time waiting at 0.0Hz when the direction changes in torque operating mode.

F4 group V/F control parameters

This set of function codes is only valid for V/F control (F0.00 = 1), not for vector control.

V/F control is suitable for general-purpose loads such as fans and pumps, or for applications where a VFD has multiple motors, or where the VFD power is one or more levels less than the motor power.

F4.00	V/F curve and mode setting	Factory default	0
	Setting range	0: linear V/F curve; 1: Multi-point V/F curve 2: Square V/F curve 3-11: 1.1-1.9 power VF curves, respectively; 12: V/F fully separated mode	

Fan pump load, you can choose square V/F control.

Common VF control mode:

0: straight line V/F curve. Suitable for ordinary constant torque loads.

1: Multi-point V/F curve. Suitable for special loads such as dehydrators and centrifuges.

2: Square V/F curve. Suitable for centrifugal loads such as fans and pumps.

VF separation control mode:

12: VF complete separation mode. In this case, the output voltage is set separately according to the setting mode of F4.43(VF separated voltage source).

F4.01	Manual torque lift	Factory default	Model determination
	Setting range	0.1 to 30.0%, 0 Automatic torque boost	
F4.02	Torque boost cutoff frequency	Factory default	50.00Hz
	Setting range	0.00Hz to Maximum frequency F0.10	

In order to compensate the low frequency torque characteristics of V/F control, the output voltage of the inverter is improved.

The torque lift setting is too large, the motor is easy to overheat, and the inverter is easy to over current. Generally, the torque increase should not exceed 8.0%. The effective adjustment of this parameter can effectively avoid the over-current situation when starting. You are advised to increase this parameter for a large load. You can reduce this parameter when the load is light. When the torque boost is set to 0.0, the inverter is used for automatic torque boost. Torque boost torque cutoff frequency: Below this frequency, torque boost torque is effective, beyond this set frequency, torque boost failure, see Figure 9-4-1 for details.

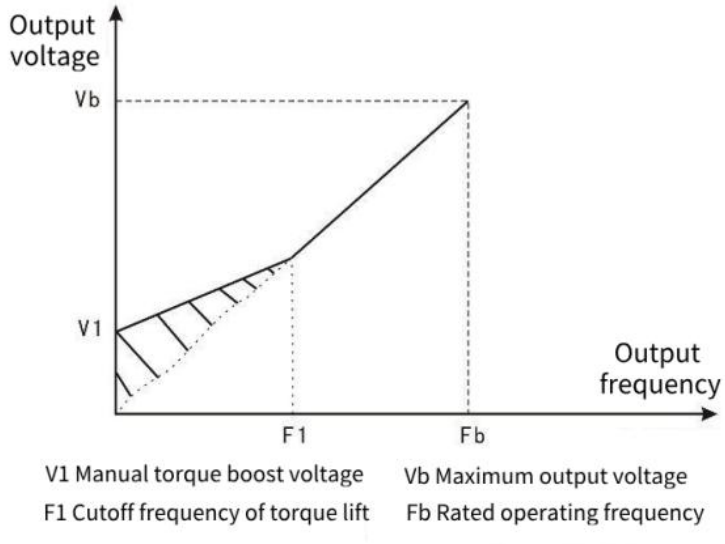

Figure 9-4-1 Manual torque raising diagram

F4.03	Self-set frequency F1	Factory default	3.00Hz
	Setting range	0.00Hz to F4.05	
F4.04	Self-set voltage point V1	Factory default	10.0%
	Setting range	0.0% to 100.0%	
F4.05	Self-set frequency point F2	Factory default	5.00Hz
	Setting range	F4.03 to F4.07	
F4.06	Self-set voltage point V2	Factory default	15.0%
	Setting range	0.0% to 100.0%	
F4.07	Self-set frequency F3	Factory default	8.00Hz
	Setting range	F4.05 to F4.09	
F4.08	Self-set voltage point V3	Factory default	22.0%
	Setting range	0.0% to 100.0%	
F4.09	Self-set frequency F4	Factory default	12.00Hz
	Setting range	F4.07 to Rated frequency of motorF2.04	
F4.10	Self-set voltage point V4	Factory default	31.0%
	Setting range	0.0% to 100.0%	

F4.03 to F4.08 Six parameters define a multi-segment V/F curve. The setting value of the V/F curve is usually set according to the load characteristics of the motor. Note: V1 < V2 < V3 < V4, F1 < F2 < F3 < F4. When the voltage is set too high at low frequency, it may cause the motor to overheat or even burn, and the inverter may over-lose speed or over-current protection.

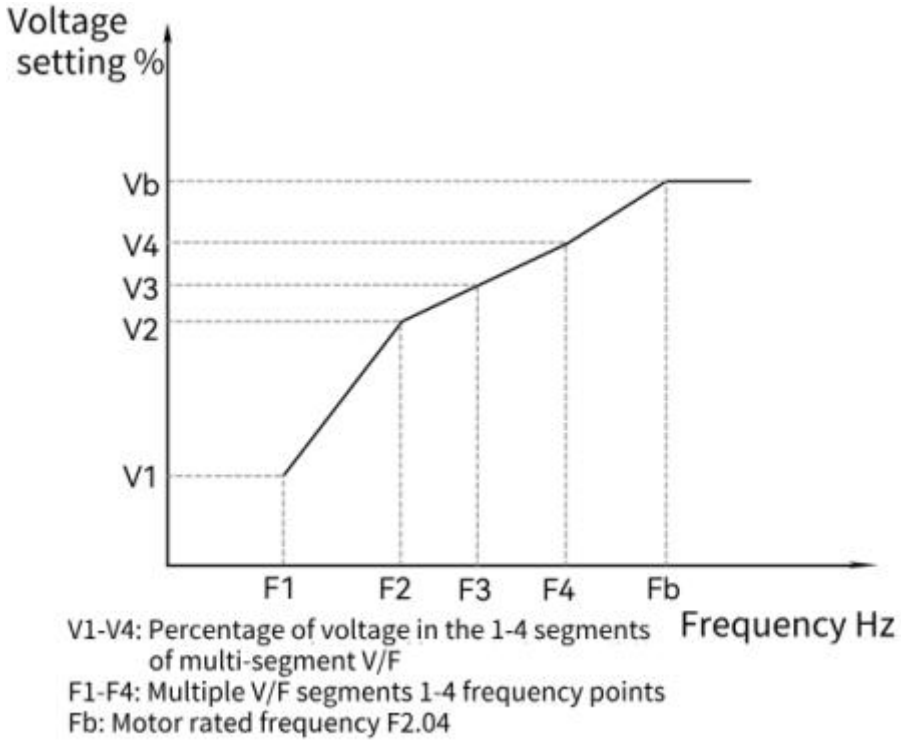

Figure 9-4-2 V/F curve setting diagram

F4.11	Oscillation suppression gain	Factory default	Model determination
	Setting range	0.0 to 10.0	
F4.12	Oscillation suppression filtering time	Factory default	50ms
	Setting range	1 to 1000ms	

When the motor does not oscillate, select this gain to be 0. The gain can only be properly increased when the motor obviously oscillates and cannot operate normally, and the greater the gain, the more obvious the suppression of oscillation. When the oscillation suppression function is used, the rated current and no-load current parameters of the motor are required to be set with little deviation from the actual value. The gain is selected as small as possible under the premise of effectively suppressing oscillation, so as not to have too much influence on VF operation.

F4.14	Percentage of output voltage	Factory default	100%
	Setting range	25 to 100%	

The output voltage regulation coefficient of the inverter. This function is used to adjust the output voltage of the inverter to suit the needs of different V/F characteristics.

F4.17	EVF torque boost gain	Factory default	100.0%
	Setting range	0 to 500.0%	
F4.18	EVF torque boost filtering time	Factory default	20ms
	Setting range	1 to 1000ms	

When set to automatic torque boost F4.01=0, the torque boost works. This parameter is used to set the gain of automatic torque boost and the filtering time.

F4.19	EVF slip compensation gain	Factory default	100.0%
	Setting range	0 to 500.0%	
F4.20	EVF slip compensation filtering time	Factory default	100ms
	Setting range	1 to 1000ms	

This function can make the output frequency of the inverter automatically adjust in the Setting range with the change of the motor load; Dynamically compensates the slip frequency of the motor, so that the motor basically maintains a constant speed, and effectively reduces the influence of load changes on the motor speed.

F4.21	Automatic energy saving selection	Factory default	50
	Setting range	Units place: 0 is off, 1 is on Tens place: Frequency change exit depth Hundreds place: Thousand place:	
F4.22	Lower limit frequency of energy saving operation	Factory default	25.0%
	Setting range	0.0 to 100.0%	
F4.23	Energy saving and pressure reduction time	Factory default	10.0s
	Setting range	0.1 to 5000.0s	
F4.24	Lower limit of energy saving and pressure reduction	Factory default	30.0%
	Setting range	20.0 to 100.0%	
F4.25	Energy saving and pressure reduction rate	Factory default	50V/s
	Setting range	1 to 1000V/s	
F4.26	Voltage regulated proportional gain	Factory default	20
	Setting range	0 to 100	
F4.27	Voltage regulation integral gain	Factory default	20
	Setting range	0 to 100	

Automatic energy saving options:

0: No operation is performed

1: Automatic energy-saving operation

During operation, the inverter can automatically calculate the optimal output voltage from the load condition to save power. The power saving function is to reduce the output voltage and improve the efficiency of the motor to achieve the purpose of energy saving.

Lower limit frequency of energy-saving operation: If the output frequency of the inverter is lower than this value, even if the automatic energy-saving operation function is effective, the automatic energy-saving operation will be turned off. 100.0% corresponds to rated frequency of motor.

Energy-saving voltage reduction time: After meeting the automatic energy-saving operation conditions, the output voltage from the rated voltage of the motor to 0 volts.

Lower limit of energy-saving voltage reduction: Set the lower limit of output voltage that can be reduced during automatic energy-saving operation. 100.0% is the rated voltage of the motor.
Energy saving voltage reduction rate: The rate of voltage reduction when the output voltage is reduced during automatic energy saving operation.
Voltage regulation proportional gain: Kp parameter for automatic energy saving PI control.
Voltage regulation integral gain: Ki parameter when PI control automatically saves energy.

F4.30	Stabilizer proportional gain	Factory default	10.0%
	Setting range	0.1% to 100.0%	
F4.31	Stabilizer filtering time	Factory default	50ms
	Setting range	1ms to 1000ms	

Parameters of the frequency stabilizer When the synchronous motor with VVC is running. If there are unstable fluctuations in current and speed, adjusting F4.30 and F4.31 can improve and eliminate them.

F4.32	Low frequency current lift	Factory default	100.0%
	Setting range	0.0% to 200.0%	
F4.33	Low frequency boost maintenance frequency	Factory default	10.0%
	Setting range	0 to 100.0%	
F4.34	Low frequency current boosts the cutoff frequency	Factory default	30.0%
	Setting range	0 to 100.0%	

Amplitude of the boost of the current when the synchronizer VVC is operating at low frequency. VVC has poor control of low frequency torque, so the output current will be increased at low frequency to obtain a larger starting torque. The adjustment of F4.32 can improve the motor starting torque and low-frequency carrying capacity, but the low-frequency running current increases as above.
When the frequency is lower than the maintenance frequency, the lifting current will be maintained to the F4.32 setting value. When the frequency is higher than the cut-off frequency, the lifting current drops to 0. When the frequency is between the two, the lift current boundary is between 0 and F4.32.

F4.35	D-axis current gain	Factory default	2.0
	Setting range	0.0 to 100.0	
F4.36	Q-axis current gain	Factory default	2.0
	Setting range	0.0 to 100.0	

When the synchronous motor with VVC is controlled, the D-axis voltage adjusts the gain.
When the synchronous motor with VVC is controlled, the Q-axis voltage adjusts the gain.

F4.37	Magnetic flux set strength	Factory default	30.0%
	Setting range	0 to 500%	
F4.38	Magnetic flux control proportional gain	Factory default	500
	Setting range	0 to 9999	
F4.39	Magnetic flux controls the integral gain	Factory default	500
	Setting range	0 to 9999	

Synchronous motor with VVC control is a kind of control mode based on reactive power stabilization. This set of parameters is used to set the amount of reactive power, and the gain and integral of the reactive power controller.

F4.40	DC pull in time	Factory default	1000ms
	Setting range	1ms to 9999ms	

When the synchronous motor with VVC is started, the permanent magnet needs to be pulled to the set position. This parameter is used to set the pulling time. During this time, the inverter outputs DC.

F4.41	Startup frequency	Factory default	3.00Hz
	Setting range	0.00Hz to 99.00Hz	
F4.42	Startup frequency time	Factory default	3.0s
	Setting range	0.0s to 999.0s	

To prevent VVC synchronous motor start out of step, the program control the motor to accelerate to a lower frequency for a period of time, this set of parameters is used to set the maintenance frequency and time, within the start frequency time, the motor will not accelerate.

F4.43	V/F Separate the output voltage source	Factory default	0
	Setting range	0: function code F4.44 setting 1: AI1 is set 2: AI2 is set 3: Reverse 4: Set the terminal PULSE 5: Multi-speed 6: Simple PLC 7: PID 8: Communication is given 100% corresponding to the rated voltage of the motor	

Define the voltage source for VF separation. The output voltage can come from a digital setting (F4.13), or from an analog input channel, multi-speed instruction, PLC, PID, or communication set.

When the output voltage is set non-numerically, 100% of the input setting corresponds to the rated voltage of the motor, and the absolute value of the input setting is taken as the effective setting value.

0: Numeric setting (F4.44); The voltage is set directly via F4.13.

1: AI1 2: AI2 Voltage is determined by the analog input terminal, AI input 0 to 100% corresponds to the output voltage 0V to rated voltage of the motor.

4. PULSE pulse setting (DI4) The voltage is set by the terminal pulse, need to set F5.28 to F5.31 to determine the correspondence between the given signal and the given voltage (100% corresponding to the rated voltage of the motor). Pulse given signal specifications: voltage range 9V to 30V, frequency range 0kHz to 100kHz.

Pulse Settings can only be input from the high-speed pulse input terminal DI6.

5. Multi-stage speed: When the voltage source is multi-stage speed, it is necessary to set the F4 group "input terminal" and the FC group "multi-stage speed and PLC" parameters to determine the correspondence between the given signal and the given voltage (100% corresponding to the rated voltage of the motor).

6. Simple PLC: When the voltage source is simple PLC, it is necessary to set the FC group "multi-speed and PLC" parameters to determine the given output voltage (100% corresponding to the rated voltage of the motor).

7. PID: Generate output voltage according to PID closed loop. For details, see FA Group PID.

8. Communication set. The voltage is set by the upper computer through communication (100% corresponding to the rated voltage of the motor).

F4.44	V/F separation output voltage digital setting	Factory default	0
	Setting range	0.0% to 100.0%	

When the voltage source is set digitally, this value is directly used as the output voltage target value.

F4.45	V/F separation voltage rise time	Factory default	1.0
	Setting range	0.0 to 1000.0s	
F4.46	V/F separation voltage drop time	Factory default	1.0
	Setting range	0.0 to 1000.0s	

VF separation rise time refers to the time required for the output voltage to change from 0V to the rated voltage of the motor.As shown in Figure 9-4-3:

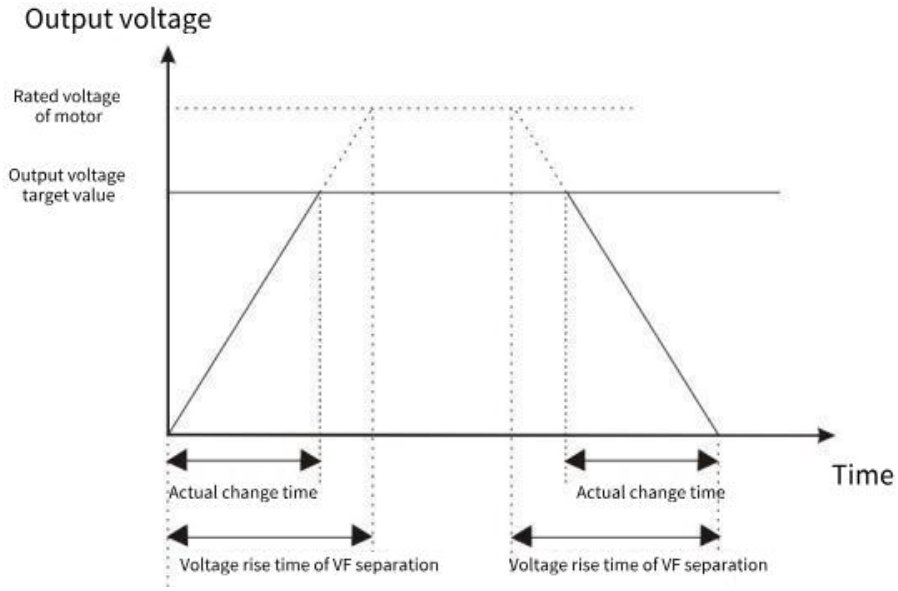

Figure 9-4-3 V/F Separation diagram

F4.47	V/F separate stop mode	Factory default	0
	Setting range	0: The voltage/frequency simultaneously decreases to 0 1: The frequency decreases after the voltage drops to 0	

This parameter sets the way VF separation stops.

F5 Input terminals

DI5 to DI8 terminal function selection (Extension) : Standard two-channel extension DI.

F5.00	DI1 terminal function Select	Factory default	1
F5.01	DI2 terminal function Select	Factory default	2
F5.02	DI3 terminal function Select	Factory default	9
F5.03	DI4 terminal function Select	Factory default	12
F5.04	DI5 terminal function Select(expansion)	Factory default	0
F5.05	DI6 terminal function Select(expansion)	Factory default	0
F5.08	AI1 selects the DI terminal function	Factory default	0
F5.09	AI2 selects the DI terminal function	Factory default	0

This parameter is used to set the corresponding function of the digital multifunction input terminal:

Setting value	Function	Description
0	No function	The inverter does not operate even if there is a signal input. Unused terminals can be set to no function to prevent misaction.
1	Forward running (FWD)	The inverter does not operate even if there is a signal input. Unused terminals can be set to no function to prevent misaction.
2	Reverse running (REV)	
3	Three-wire operation control	Use this terminal to determine that the inverter operating mode is three-wire control mode. For details, please refer to F5.16 three-wire control mode function code introduction.
4	Forward jog (FJOG)	FJOG is a forward jog, RJOG is a reverse jog.The jog frequency, acceleration and deceleration time refer to the detailed description of F8.00, F8.01, F8.02 function code.
5	Reverse jog (RJOG)	
6	Terminal UP	Modify the frequency increment and decrement instructions when the frequency is given by the external terminal. The set frequency can be adjusted up or down when the frequency source is set to a digital setting.
7	Terminal DOWN	
8	Free parking	The AC Drive blocks the output, the motor parking process is not controlled by the inverter. A method often used for loads of large inertia and where there is no requirement for stopping time. This method has the same meaning as the free parking mentioned in F1.10.
9	Reset fault (RESET)	External fault reset function. The function is the same as RESET key on the keyboard. Remote fault reset can be realized with this

Setting value	Function	Description
		function.
10	Operation pause	The inverter slows down and stops, but all operating parameters are memory state. Such as PLC parameters, pendulum parameters, PID parameters. After the signal disappears, the inverter will resume operation to the state before stopping.
11	External fault normally open input	When the external fault signal is sent to the inverter, the inverter reports a fault and stops
12	Multi-segment speed instruction terminal 1	A total of 15 segment speeds can be set through the combination of the digital state of the four terminals. The detailed composition is shown in Table 1.
13	Multi-segment speed instruction terminal 2	
14	Multi-segment speed instruction terminal 3	
15	Multi-segment speed instruction terminal 4	
16	Acceleration and deceleration time selection 1	Selects four acceleration and deceleration times through the combination of the digital states of the two terminals. The detailed composition is shown in Schedule 2.
17	Acceleration and deceleration time selection 2	
18	Frequency source Switching	When the frequency source selection (F0.07 bits) is set to 2, this terminal is not the primary frequency source X, otherwise it is the secondary frequency source Y. When the frequency source selection (F0.07 bits) is set to 3, this terminal is invalid as the primary frequency source X, otherwise it is the result of the primary and secondary operations.
19	UP/DOWN setting Clear	When the frequency is set to digital frequency, this terminal can clear the frequency value of UP/DOWN change, so that the given frequency is restored to the value set by F0.08.
20	Run the instruction to switch terminals	When the command source (F0.01=1) is set to terminal control, the terminal is switched to keyboard control. When the command source (F0.01=2) is set to Communication control, this terminal is switched to keyboard control.
21	Acceleration and deceleration Disable	Ensure that the inverter is not affected by external signals (except for shutdown commands) and maintain the current output

Setting value	Function	Description
		frequency.
22	PID pause	PID temporarily fails, inverter maintains current frequency output.
23	PLC state reset	The PLC is paused during execution, and can be returned to the initial state of the simple PLC through this terminal when running again.
29	Torque control disable	The torque control mode of the inverter is prohibited. 30 PULSE Pulse input
30	PULSE pulse input (valid for DI4 only)	Is the pulse input terminal.
32	Immediate DC braking	The terminal is effective, the inverter directly switches to DC braking state, and exits if invalid.
33	External fault normally closed input	
35	PID action direction Take the reverse terminal	If this terminal is valid, the PID action direction is opposite to the direction set in F9.03.
36	External parking terminal 1 (Panel only)	For keyboard control, the terminal can be used to STOP, which is equivalent to the Stop key on the keyboard.
37	Control command switch terminal	This terminal is valid. If F0.01 is set to terminal control, it switches to communication control. If F0.01 is set to communication control, switch to terminal control.
38	PID Integration pause terminal	If the terminal is valid, the PID integration function is paused, but the proportional and differential adjustment still work.
39	Primary frequency source and Preset frequency switching terminal	If this terminal is valid, replace the primary frequency source with the preset frequency (F0.08).
40	Auxiliary frequency source and Preset frequency switching terminal	If this terminal is valid, replace the auxiliary frequency source with the preset frequency (F0.08).
43	PID parameter switching	This terminal is valid only when the terminal F9.18(PID parameter switching condition) is the DI terminal. Parameter F9.15 to F9.17 is used for PID. The terminal is invalid. Parameters F9.05 to F9.07 are used.
44	User-defined fault 1	When the external fault signal is sent to the VFD, the VFD reports a fault and stops.
45	User-defined fault 2	When the external fault signal is sent to the VFD, the VFD reports a fault and stops.
46	Speed control/torque	Switch the inverter to run in torque control or

Setting value	Function	Description
	control switching	speed control mode. If this terminal is invalid, it runs in the mode defined by F3.09 (speed/torque control mode), and if it is valid, it switches to the other mode.
47	Emergency stop	This terminal is valid and the inverter stops at F8.09 emergency stop time.
48	External parking terminal 2	In any control mode, this terminal can be used to stop the car, according to the deceleration time 4.
49	Deceleration DC braking	This terminal is effective, the inverter first decelerates to the shutdown DC braking starting frequency and then switches to the DC braking state, and exits when invalid.
50	Clear the current running time	If this terminal is valid, the inverter's current running timing time will be cleared, and this function will be used for timing running (F8.42).

Schedule 1: multi-stage speed function description.

K4	K3	K2	K1	Frequency setting	Corresponding parameter
OFF	OFF	OFF	OFF	Multiple speed 0	FD.0
OFF	OFF	OFF	ON	Multiple speed 1	FD.01
OFF	OFF	ON	OFF	Multiple speed 2	FD.02
OFF	OFF	ON	ON	Multiple speed 3	FD.03
OFF	ON	OFF	OFF	Multiple speed 4	FD.04
OFF	ON	OFF	ON	Multiple speed 5	FD.05
OFF	ON	ON	OFF	Multiple speed 6	FD.06
OFF	ON	ON	ON	Multiple speed 7	FD.07
ON	OFF	OFF	OFF	Multiple speed 8	FD.08
ON	OFF	OFF	ON	Multiple speed 9	FD.09
ON	OFF	ON	OFF	Multiple speed 10	FD.10
ON	OFF	ON	ON	Multiple speed 11	FD.11
ON	ON	OFF	OFF	Multiple speed 12	FD.12
ON	ON	OFF	ON	Multiple speed 13	FD.13
ON	ON	ON	OFF	Multiple speed 14	FD.14
ON	ON	ON	ON	Multiple speed 15	FD.15

Schedule 2: Acceleration and deceleration time selection instructions.

Terminal 2	Terminal 1	Acceleration or deceleration time selection	Corresponding parameter
OFF	OFF	Acceleration time 1	F0.17 , F0.18
OFF	ON	Acceleration time 2	F8.03 , F8.04
ON	OFF	Acceleration time 3	F8.05 , F8.06
ON	ON	Acceleration time 4	F8.07 , F8.08

F5.10	**AI1 input selection**	**Factory default**	0
	Setting range	0: 0 to 10V 1: 4 to 20mA 2: 0 to 20mA 3: 0 to 5V 4: 0.5 to 4.5V	
F5.11	**AI2 input selection**	**Factory default**	1
	Setting range	0: 0 to 10V 1: 4 to 20mA 2: 0 to 20mA 3: 0 to 5V 4: 0.5 to 4.5V	

AI1 input selection: AI1 does not support current input.

F5.12	VDI1 terminal function selection	Factory default	0
F5.13	VDI2 terminal function selection	Factory default	0
F5.14	VDI3 terminal function selection	Factory default	0

VDI1 to VDI3 terminal function: Three virtual DI.

F5.15	DI filtering time	Factory default	0.010s
	Setting range	0.000s to 1.000s	

Set the sensitivity of the DI terminal. If the digital input terminal is susceptible to interference and cause misoperation, this parameter can be increased, the anti-interference ability is enhanced, but the sensitivity of the DI terminal is reduced.

F5.16	Terminal command mode	Factory default	0
	Setting range	0: Two-line type 1 1: Two-wire type 2 2: Three-wire type 1 3: Three-wire type 2	

This parameter defines four different ways to control the operation of the inverter through the external terminals.

0: Two-wire mode 1: This mode is the most commonly used two-wire mode. The FWD and REV terminal commands determine the forward and reverse of the motor. (active level)

1: Two-wire mode 2: FWD is the enabled terminal in this mode. The direction is determined by the state of REV. (active level)

2: Three-wire control mode 1: Din is the enable terminal in this mode, and the direction is respectively controlled by FWD and REV (pulse effective). This is done by disconnecting the Din terminal signal when stopping.

3: Three-wire control mode 2: The enable terminal of this mode is Din, the running command is given by FWD (pulse effective), and the direction is determined by the state of REV. The stop command is done by disconnecting Din's signal.

Din is the multifunctional input of DI1 to DI4, and its corresponding terminal function should be defined as function No. 3 "three-wire operation control".

F5.17	UP/DOWN Rate of change	Factory default	0.50Hz
	Setting range	0.01Hz to 655.35Hz	

Press the UP/DOWN button and the terminal to adjust the change rate of the set frequency.

F5.18	AI1 minimum input	Factory default	0.00V
	Setting range	0.00V to F5.20	
F5.19	AI1 the minimum input corresponds to the setting	Factory default	0%
	Setting range	-100.00% to +100.0%	
F5.20	AI1 maximum input	Factory default	10.00V
	Setting range	F5.18 to +10.00V	
F5.21	AI1 the maximum input corresponds to the setting	Factory default	100.0%
	Setting range	-100.00% to +100.0%	
F5.22	AI1 filtering time	Factory default	0.10s
	Setting range	0.00s to 10.00s	
F5.23	AI2 minimum input	Factory default	2.00V
	Setting range	-10.00V to F5.25	
F5.24	AI2 the minimum input corresponds to the setting	Factory default	0%
	Setting range	-100.00% to +100.0%	
F5.25	AI2 maximum input	Factory default	10.00V
	Setting range	F5.23 to +10.00V	
F5.26	AI2 the maximum input corresponds to the setting	Factory default	100.0%
	Setting range	-100.00% to +100.0%	
F5.27	AI2 filtering time	Factory default	0.10s
	Setting range	0.00s to 10.00s	

The above function code defines the relationship between the analog input voltage and the set value represented by the analog input. When the analog input voltage exceeds the set maximum input range, the other part will be calculated as the maximum input; when the analog input voltage exceeds the set minimum input range, the other part will be calculated according to the AI

minimum input. When the analog input is a current input, 1mA current is equivalent to 0.5V voltage. In different applications, the nominal value corresponding to the simulated 100% is different, please refer to the description of each application.

The following illustrations illustrate several settings:

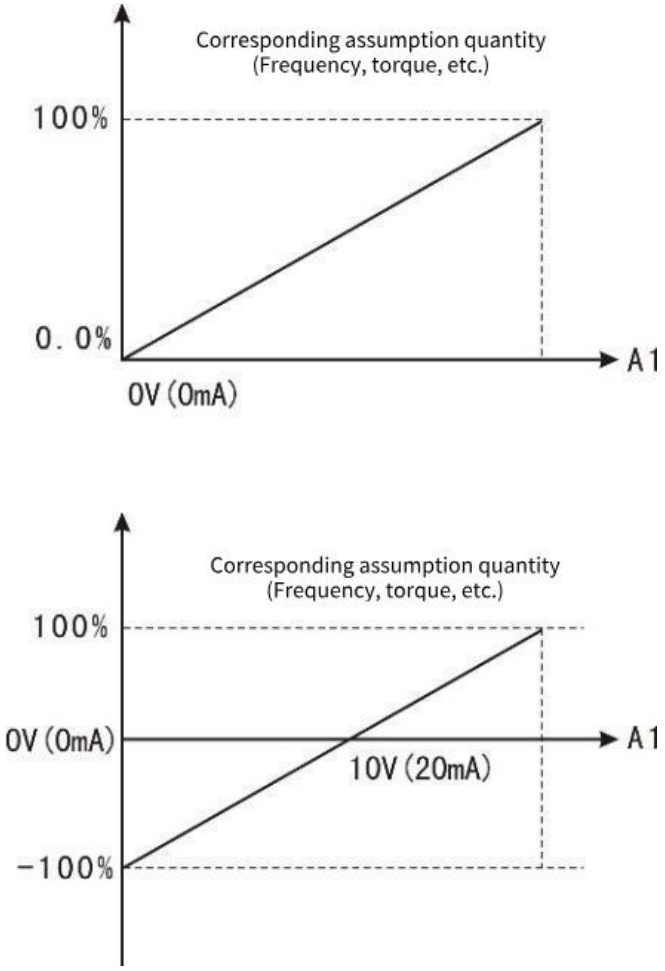

Figure 9-5-1 simulates the correspondence between given and set quantities

F5.28	PULSE input minimum frequency	Factory default	0.00kHz
	Setting range	0.00 to F5.30	
F5.29	PULSE the minimum frequency corresponds to the setting	Factory default	0%
	Setting range	-100.00% to +100.0%	
F5.30	pulse input maximum frequency	Factory default	20.00kHz
	Setting range	F5.28 to 50.00kHz	
F5.31	PULSE maximum frequency Correspondence setting	Factory default	100.0%
	Setting range	-100.00% to +100.0%	
F5.32	PULSE filtering time	Factory default	0.10s
	Setting range	0.00s to 10.00s	

This set of function codes defines the correspondence when pulses are used as the frequency setting mode. Pulse frequency input can only be entered through the DI4 channel. The application

of this set of functions is similar to that of AI1.

F5.33	DI1 enable the delay time	Factory default	0.0s
	Setting range	0.0s to 360.0s	
F5.34	DI2 enable the delay time	Factory default	0.0s
	Setting range	0.0s to 360.0s	
F5.35	DI1 forbidden energy delay time	Factory default	0.0s
	Setting range	0.0s to 360.0s	
F5.36	DI2 forbidden energy delay time	Factory default	0.0s
	Setting range	0.0s to 360.0s	

Set the delay time between the DI terminal state change and the VFD response.

At present, only DI1\DI2 has the ability to set the delay time.

F5.37	Enter terminal valid status setting 1	Factory default	0
	Setting range	0: The low level is valid 1: The high level is valid LED units place: D1 terminal LED tens place: D2 terminal LED hundreds place: D3 terminal LED thousands place: D4 terminal	
F5.38	Enter terminal valid status setting 2	Factory default	0
	Setting range	0: The low level is valid 1: The high level is valid LED units place: D5 terminal (Extended) LED tens place: D6 terminal (Extended)	
F5.39	Enter terminal valid status setting 3	Factory default	111
	Setting range	0: The low level is valid 1: The high level is valid LED units place: AI1 LED tens place: AI2 LED Hundreds place: AI3 (Extended)	
F5.40	Analog input curve selection	Factory default	0
	Setting range	The ones place: AI1 Tens place: AI2 Hundreds place: AI3 (Extended) 0: Straight line (default) 1: Curve 1 2: Curve 2	

Defines a valid state setting for the input terminal.

High: The connection between the DI terminal and COM is valid, but the disconnect is invalid.

Low level: The connection between the DI terminal and COM is invalid, and the disconnect is valid.

F5.57	AI3(Extension) is used to select the DI terminal function	Factory default	
	Setting range	For details, see the function table of the DI multi-function input terminal	
F5.58	AI4(Extension) is used to select the DI terminal function	Factory default	
	Setting range	For details, see the function table of the DI multi-function input terminal	
F5.59	AI3(Extension) input selection	Factory default	0
	Setting range	0: 0 to 10V 1: 4 to 20mA 2: 0 to 20mA 3: 0 to 5V 4: 0.5 to 4.5V	
F5.60	AI3(Extension) input selection	Factory default	0
	Setting range	0: 0 to 10V 1: 4 to 20mA 2: 0 to 20mA 3: 0 to 5V 4: 0.5 to 4.5V	
F5.61	AI3(Extended) lower limit	Factory default	-10.00V
	Setting range	0 to F5.63	
F5.62	AI3(Extended) lower limit is set accordingly	Factory default	-100.00%
	Setting range	-100.0% to +100.0%	
F5.63	AI3(Extended) Upper limit	Factory default	10.00V
	Setting range	F5.61 to +10.00V	
F5.64	The AI3(Extended) upper limit corresponds to the setting	Factory default	100.00%
	Setting range	-100.0% to +100.0%	

2-channel expansion AI.

F5.65	AI3(Extended) filtering time	Factory default	0.10s
	Setting range	0.00 to 10.00s	

The above function code defines the relationship between the analog input voltage and the set value represented by the analog input. When the analog input voltage exceeds the set maximum input range, the other part will be calculated as the maximum input; when the analog input voltage exceeds the set minimum input range, the other part will be calculated according to the AI minimum input. When the analog input is a current input, 1mA current is equivalent to 0.5V voltage. In different applications, the nominal value corresponding to the simulated 100% is different, please refer to the description of each application.

The following illustrations illustrate several settings:

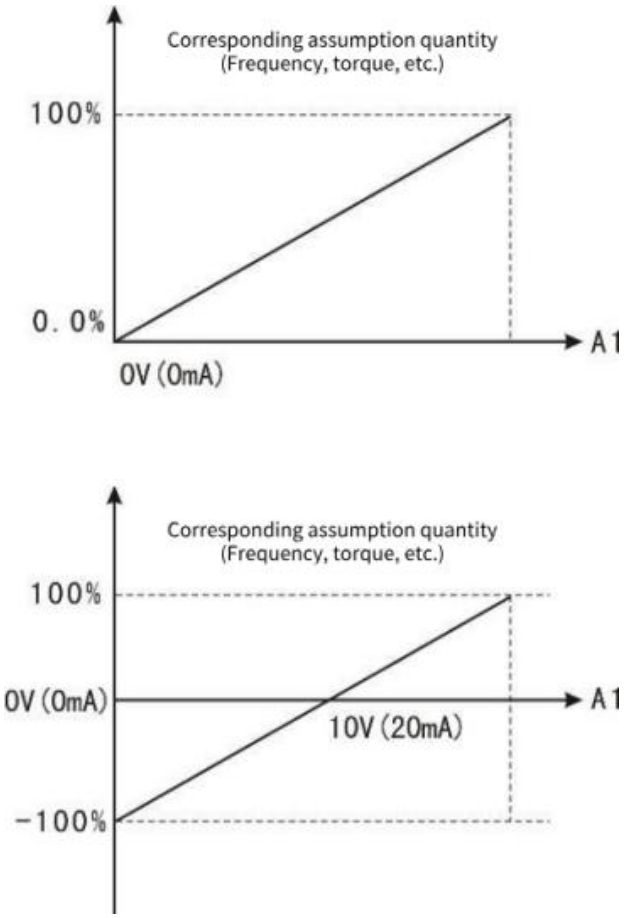

Figure 9-5-1 Simulates the correspondence between given and set quantities

F6 group output terminals

The VC series VFD standard unit has 2 multi-function relay output terminals, 1 FM terminal (which can be used as a high-speed pulse output terminal or as an open collector output), and 2 multi-function analog output terminals.

F6.00	FM Terminal output selection		Factory default	1
	Setting range	0	Pulse output	
		1	Open collector output (FMR)	

FM terminals are programmable multiplexed terminals. Can be used as a high speed pulse output terminal (FMP), pulse frequency up to 100kHz. Refer to F6.06 for FMP related functions. Also available as an open collector output terminal (FMR). See F6.01 for FMR functions.
FMP function needs hardware support.

F6.01	FMR Open collector output selection	Factory default	0
F6.02	Relay 1 output selection	Factory default	2
F6.03	Relay 2 output selection (Extended)	Factory default	0
F6.06	VDO1 output selection	Factory default	0
F6.07	VDO2 output selection	Factory default	0
F6.08	VDO3 output selection	Factory default	0

Multi-function output terminal function selection are as follows:

Setting value	Function	Description
0	No-output	The output terminal has no function
1	VFD in operation	Indicates that the inverter is running, there is an output frequency (can be zero) at this time output ON signal.
2	Fault output	When the inverter fails and fails to stop, the output ON signal.
3	Frequency level detects FDT arrival	Please refer to function codes F8.19 and F8.20 for detailed instructions
4	Frequency arrival	Please refer to function code F8.26 for detailed instructions.
5	Running at zero speed	The VFD operates and the output frequency is 0, and the output signal is ON.
6	Motor overload pre-alarm	Before the motor electronic thermal protection action, according to the overload forecast value, after exceeding the forecast value output ON signal. Motor overload parameters

Setting value	Function	Description
		are set in FA.00 to FA.02.
7	Inverter overload pre-alarm	After checking the inverter overload, 10s before the protection occurs. Output ON signal.
8	Set count pulse value to arrive	When the count value reaches the value set by FB.08, the ON signal is output.
9	Specified count pulse value arrived	When the count value reaches the value set by FB.09, the ON signal is output. For the counting function, see FB group function description
10	Length reached	When the actual length of the detection exceeds the length set by FB.05, the ON signal is output.
11	PLC cycle complete	When the simple PLC completes a cycle, it outputs a pulse signal with a width of 250ms.
12	Cumulative running time arrived	When the accumulated running time of the inverter exceeds the time set by F8.17, the output ON signal.
13	-	-
14	Torque limit	When the torque limit function is operated, the stall protection function automatically acts, automatically changes the output frequency, and the output ON signal indicates that the output torque is limited. This output signal can be used to reduce the load or to display an overload status signal on the monitoring device.
15	Operational readiness	The main circuit and control circuit power supply are established, the inverter protection function is not active, and the inverter is in the running state, the ON signal is output.
16	AI1>AI2	When the value of the analog input AI1 is greater than that of the other input AI2, the ON signal is output.

Setting value	Function	Description
17	Frequency upper limit reached	Output ON signal when the operating frequency reaches the upper limit frequency.
18	Frequency lower limit reached (Run related)	Output ON signal when the operating frequency reaches the lower limit frequency. In the shutdown state, the signal is always OFF.
19	Undervoltage state output	The inverter outputs ON signal when it is undervoltage.
20	Communication setting	See related instructions in the communication protocol
21	Positioning completed	Reserve
22	Positioning close	Reserve
23	Zero speed running 2 (Also output when shut down)	VFD output frequency is 0, output ON signal (shutdown also output).
24	Accumulative power-on time reached	When F7.13(the accumulated power-on time of the inverter) exceeds the time set by F8.16, the ON signal is output.
25	Frequency level detection FDT2 output	For details, see function codes F8.28 and F8.29.
26	Frequency to 1 output	For details, see function codes F8.30 and F8.31.
27	Frequency to 2output	For details, see function codes F8.32 and F8.33.
28	Current reaches 1 output	For details, see function codes F8.38 and F8.39.
29	Current reaches 2 output	For details, see function codes F8.40 and F8.41.
30	Timed arrival output	When F8.42(timing function selection) is effective, the VFD will output ON signal when the running time reaches the set timing time.
31	-	-
32	-	
33	Running direction	When the inverter runs in reverse, the ON signal is output
34	-	
35	Module temperature reach	

Setting value	Function	Description
36	Software overcurrent output	For details, see function codes F8.36 and F8.37.
37	Lower limit frequency reached (Run independent)	Output ON signal when the operating frequency reaches the lower limit frequency. (When the conditions are met, the ON signal will also be output in the shutdown state)
38	Fault output (Continue running)	When the inverter fails, output ON signal
39	Reserve	
40	The running time arrive	
41	User defined output 1	User can define the conditions to output the terminal
42	User-defined output 2	User can define the conditions to output the terminal
43	Timer output	Output ON signal when the timing setting condition is met
44	Forward running status	If the inverter is in forward running, output ON signal
45	Reverse running status	If the inverter is in reverse running, output ON signal

F6.10	AO output signal selection	Factory default	00
	Setting range	The ones place: AO1 0: 0 to 10V 1: 4.00 to 20.00mA 2: 0.00 to 20.00mA Tens place: AO2 (Extended) 0: 0 to 10V 1: 4.00 to 20.00mA 2: 0.00 to 20.00mA	

All models 1-channel AO.

F6.11	FMP (Pulse output terminal) output selection	Factory default	0
	Setting range	0: Running frequency 1: Set the frequency 2: Output current 3: Output torque 4: Output power 5: Output voltage 6: Reserve 7: AI1 8: AI2 9: AI3 10: PULSE input value 11: Reserve 12: Communication settings 13: Motor speed 14: Output current (0 to 1000A, corresponding to 0 to 10V) 15: Output voltage (0 to 1000V, corresponding to 0 to 10V) 16: Bus voltage (0 to 1000V, corresponding to 0 to 10V)	
F6.12	AO1 output selection	Factory default	0
	Setting range	Consistent with F6.11 setting range	
F6.13	AO2 output selection (Extended)	Factory default	0
	Setting range	Consistent with F6.11 setting range	

The standard output of the analog output (zero bias is 0, gain 1) is 0mA to 20mA (or 0V to 10V). The range of corresponding quantities represented is shown in the following table:

Setting value	Function	Range
0	Operating frequency	0 to Maximum output frequency
1	Setting frequency	0 to Maximum output frequency
2	Output current	0 to2 times the rated motor current
3	Output torque	0 to2 times the rated motor torque
4	Output power	0 to 2 times rated power
5	Output voltage	0 to 1.2 times rated voltage of inverter
6	Reserve	
7	AI1	0V to10V
8	AI2	0V to10V/0 to 20mA
9	Reserve	
10	Length	0 to Maximum set length

11	Count value	0 to Maximum count value
12	Communication setting	-10000 to 10000
13	Motor speed	0 to The maximum output frequency corresponds to the speed
14	Output current	0 to 1000A, correspondence 0-10V 0 to 1000V, correspondence 0-10V
15	Output voltage	0.0V to 1000.0V
16	Bus voltage	0 to 1000V, correspondence 0-10V

F6.14	FM upper frequency output limit	Factory default	20.00kHz
	Setting range	0.00 to- 50.00kHz	

F6.00 maximum frequency of pulse output when selecting pulse output.

F6.15	AO1 minimum input	Factory default	0.00V
	Setting range	0.00V to F6.17	
F6.16	AO1 the minimum input corresponds to the setting	Factory default	0.0%
	Setting range	0.0% to +100.0%	
F6.17	AO1 maximum input	Factory default	10.00V
	Setting range	F6.15 to +10.00V	
F6.18	AO1 the maximum input corresponds to the setting	Factory default	100.0%
	Setting range	0.0% to +100.0%	

The above function code defines the relationship between the analog output voltage and the set value represented by the analog output. When the analog output voltage exceeds the set maximum output range, the other part will be calculated as the maximum output; when the analog output voltage exceeds the set minimum output range, the other part will be calculated according to the AO minimum output. When the analog output is a current output, 1mA current is equivalent to 0.5V voltage. In different applications, the nominal value corresponding to the simulated 100% is different, please refer to the description of each application.

F6.19	AO2 minimum input (Extended)	Factory default	0.00V
	Setting range	0.00V to F6.21	
F6.20	AO2 minimum Input mapping Settings (Extended)	Factory default	0.0%
	Setting range	0.0% to +100.0%	
F6.21	AO2 maximum input (Extended)	Factory default	10.00V
	Setting range	F6.19 to +10.00V	
F6.22	AO2 maximum input corresponding Settings (Extended)	Factory default	100.0%
	Setting range	0.0% to +100.0%	

F6.23	FMR turn-on delay time	Factory default	0.0s
	Setting range	0.0s to 3600.0s	

The above function code defines the relationship between the analog output voltage and the set value represented by the analog output. When the analog output voltage exceeds the set maximum output range, the other part will be calculated as the maximum output; when the analog output voltage exceeds the set minimum output range, the other part will be calculated according to the AO minimum output. When the analog output is a current output, 1mA current is equivalent to 0.5V voltage. In different applications, the nominal value corresponding to the simulated 100% is different, please refer to the description of each application.

F6.24	Relay 1 on delay time	Factory default	0.0s
	Setting range	0.0s to 3600.0s	
F6.25	Relay 2 turn-on delay time (Extended)	Factory default	0.0s
	Setting range	0.0s to 3600.0s	
F6.26	VDO connection delay	Factory default	0.0s
	Setting range	0.0s to 3600.0s	
F6.27	FMR disconnect delay time	Factory default	0.0s
	Setting range	0.0s to 3600.0s	
F6.28	Relay 1 disconnect delay time	Factory default	0.0s
	Setting range	0.0s to 3600.0s	
F6.29	Relay 2 disconnect delay time (Extended)	Factory default	0.0s
	Setting range	0.0s to 3600.0s	
F6.30	VDO1 disconnect delay	Factory default	0.0s
	Setting range	0.0s to 3600.0s	

Set the delay time of output terminals FMR, relay 1, relay 2, VDO from the change of state to the change of output.

F6.31	Output terminal valid status Select 1	Factory default	000
	Setting range	0: Positive logic 1: Reverse logic Units place: FDOR Tens place: RL1 Hundreds place: RL2 (Extended) Thousands place: -	
F6.32	Virtual output terminal valid status Select 2	Factory default	000
	Setting range	0: Positive logic 1: Reverse logic Units place: VDO1 Tens place: VDO2 Hundreds place: VDO3 Thousands place: -	

Define the positive and negative logic of the output terminals FMR, relay 1, relay 2.

Positive logic: the digital output terminal and the corresponding public end are connected effectively, and the disconnect is invalid;

Inverse logic: The digital output terminal is not connected to the corresponding public end, and the disconnect is valid.

F6.33	User-defined output selection (EX) 1	Factory default	0
	Setting range	0: The running frequency 1: Set the frequency 2: Bus voltage 3: Output voltage 4: Output current 5: Output power 6: Output torque 7-8: Reserved 9: AI1 input 10: AI2 input 11: AI3 input (Extended)	

This parameter is used to select a reference variable for the custom output. Take the selected variable EX as the operation comparison object.

F6.34	The comparison method chosen by the user 1	Factory default	0
	Setting range	Units: Compare test methods 0: Equal to (EX == X1) 1: The value is greater than or equal to 2: Less than or equal to 3: Interval comparison (X1 ≤ EX ≤ X2) 4: Bit test (EX & X1=X2) Tens: output mode 0: False value output 1: Truth output	

The units bit selects the comparison test mode. The variables selected by F6.37 are used as comparison test objects, and the comparison and test values are set by F6.40 to F6.41.

The way the tens select the output. False value output is output if the condition is not met, and no output if it is met; Truth output is output only when the condition is met, and no output if the condition is not met.

F6.35	User-defined dead zone 1	Factory default	0
	Setting range	0 to 65535	

When the comparison test mode of F6.29 is set to greater than or equal to or less than or equal to, F6.30 is used to define the processing dead zone value centered on the comparison value X1. The processing dead zone has effect only on 1 and 2 of the comparison test mode of F6.29, and has no effect on 0, 3, and 4. For example, when F6.29 is set to 11, when EX is increased from 0 to greater than or equal to X1+F6.30, the output is valid; When EX is reduced to less than or equal to X1.F6.30, the output is invalid.

F6.36	User-defined 2 outputs the comparison value X1	Factory default	0
	Setting range	0 to 65535	
F6.37	User-defined 2 outputs the comparison value X2	Factory default	0
	Setting range	0 to 65535	
F6.38	User-defined output selection (EX) 2	Factory default	0
	Setting range	0: Running frequency 1: Set the frequency 2: Bus voltage 3: Output voltage 4: Output current 5: Output power 6: Output torque 7-8: Reserved 9: AI1 input 10: AI2 input 11: AI3 input(Expansion module)	

These two parameters are used to set the comparison value of the custom output.

Here is an example of a custom output:

1. When the set frequency is greater than or equal to 20.00HZ, the relay is closed;

Set parameters as follows: F6.02 = 41, F6.28 = 1, F6.29 = 11, F6.30 = 0, F6.31 = 2000;

2. When the bus voltage is less than or equal to 500.0V, the relay is closed; In order to avoid frequent operation of the relay when the detection voltage fluctuates 5.0V above and below 500.0V, it is required to process into a dead zone in the range of (500.0-5.0) to (500.0+5.0).

Set parameters as follows: F6.02 = 41, F6.28 = 2, F6.29 = 01, F6.30 = 50, F6.31 = 5000;

3. When the inverter is required to reverse, the relay is closed:

Set parameters as follows: F6.02 = 41, F6.28 = 5, F6.29 = 14, F6.31 = 8, F6.32= 8;

4. When AI1 input is required to be greater than 3.00V and less than or equal to 6.00V, the relay is closed:

Set parameters as follows: F6.02 = 41, F6.28=13, F6.29=13, F6.31=300, F6.32=600; F6.33 to F6.37 is the same as F6.28 to F6.32.

F6.39	The comparison method chosen by the user 2	Factory default	0
	Setting range	Units: Compare test methods 0: Equal to (EX == X1) 1: The value is greater than or equal to 2: Less than or equal to 3: Interval comparison (X1 ≤ EX ≤ X2) 4: Bit test (EX & X1=X2) Tens: output mode 0: False value output 1: Truth output	
F6.40	User-defined dead zone 2	Factory default	0
	Setting range	0 to 65535	
F6.41	User-defined 2 outputs the comparison value X1	Factory default	0
	Setting range	0 to 65535	
F6.42	User-defined 2 Output comparison value X2	Factory default	0
	Setting range	0 to 65535	

Second output. The parameter setting mode is the same as F6.33 to F6.37.

F6.43	Timer time unit	Factory default	0
	Setting range	0: Second 1: Minute 2: Hour	
F6.44	Timer maximum	Factory default	0
	Setting range	0 to 65535 (No more when set to 65000)	
F6.45	Timer set value	Factory default	0
	Setting range	0 to 65535	
F6.46	Counter maximum	Factory default	0
	Setting range	0 to 65535	
F6.47	Counter set value	Factory default	0
	Setting range	0 to 65535	

Set the timer time.

F7 group keyboard with display

F7.00	LCD keyboard parameter copy	Factory default	0
	Setting range	0: No operation is performed 1: The function parameters of the machine are uploaded to the LCD keyboard 2: LCD keyboard function parameters download to the machine	

✎**Note:** LCD is not available.

F7.01	ENT key function selection	Factory default	0
	Setting range	0: ENT is invalid 1: Switch between the command channel of the operation panel and the remote command channel (the remote command channel includes communication and terminal control) 2: Forward/reverse switching 3: Forward JOG 4: Reverse JOG 5: Menu mode switch 6: Reverse operation	

The ENT key is multiplexed into a multi-function key on the level 0 interface. The function of ENT key on the keyboard can be defined by parameter setting. This key can be used to switch between shutdown and operation.

0: This key has no function if it is set to 0.

1: Switch between keyboard commands and remote operations. Switching from the current command source to keyboard control (local operation). If the current command source is keyboard control, this command does not take effect.

2: Forward/reverse switching

Use the ENT key on the keyboard to switch the direction of the frequency instruction. This parameter is valid only when the command channel on the panel is operated.

3: Forward JOG

The forward turning point (FJOG) is achieved by the ENT key on the keyboard.

4: Reverse JOG

Reversal dotting (RJOG) is achieved by the ENT key on the keyboard.

Note: After setting this function, it is only effective in the 0-level display menu, and ENT key is the function of entering the lower-level menu/saving parameters in other interfaces.

5: Menu mode switch

Operating instructions: base for the initial menu, -C- for the debugging menu; ENT key to switch the

menu, shift key to enter the corresponding menu; debugging menu displayed as CFxx.xx

F7.02	Keyboard STOP key range	Factory default	0011
	Setting range	LED units place: Terminal control selection 0: The terminal command is invalid 1: Valid for the terminal command LED tens place: Communication control selection 0: The communication command is invalid 1: Valid for communication commands LED hundreds place: Reserved LED thousands place: Reserved	

✎**Note:** When the STOP button communication control is valid, if the machine is started by using the communication command and the machine is stopped by using the STOP button, it can be started only after the STOP command is issued before the next communication start.

F7.03	Keyboard run displays parameter 1	Factory default	3420
	Setting range	LED units place: First group display 0: Output frequency 1: Given frequency 2: Bus voltage 3: Output voltage 4: Output current 5: Output power 6: Output torque 7: DI input status 8: DO output status 9: AI1 voltage A: AI2 voltage B: AI3 voltage (Expansion module) C: Reverse D: Reverse E: Motor speed F: PID setting LED tens place: Second group display LED hundreds place: Third group display LED thousands place: Fourth group display	

F7.04	Keyboard run displays parameter 2	Factory default	0000
	Setting range	LED units place: First group display 0: No displayed 1: PID feedback 2: PLC stage 3:PULSE Indicates the input pulse frequency 4: Feedback speed 5: Reservations 6: Reservations 7: Reservations 8: Reserve 9: Current power-on time A: Current running time B: Reserved C: Communication setting D: Reservation E: Main frequency X is displayed F: Auxiliary frequency Y is displayed LED ten: second group display LED hundreds place: Third group display LED thousands place: Fourth group display		

F7.05	Keyboard stop displays parameters	Factory default	3421
	Setting range	LED units place: First group display 0: Output frequency 1: Given frequency 2: Bus voltage 3: Output voltage 4: Output current 5: Output power 6: Output torque 7: DI input status 8: DO output status 9: AI1 voltage A: AI2 voltage B: AI3 voltage(Expansion module) C: Motor speed D: PID setting E: PID feedback F: PLC stage LED tens place: Second group display LED hundreds place: Third group display LED thousands place: Fourth group display		

Control four groups of display parameters. For example, if output frequency, bus voltage, output current, and output voltage need to be displayed during operation, set the corresponding value 3420 one by one in bits to kilos.

F7.06	Load speed display factor	Factory default	1.000
	Setting range	0.001 to 65.000	

Through this parameter, the output frequency of the inverter is corresponding to the load speed, load speed = output frequency /F2.04*F2.05*F7.06.

F7.14	High cumulative power consumption	Factory default	
	Setting range	Power consumption = F7.14*65535+F7.15 Unit: kWh	
F7.15	Low cumulative power consumption	Factory default	
	Setting range	Power consumption=F7.14*65535+F7.15 Unit: kWh	

When the inverter power is large, the 16-bit power consumption parameter will overflow quickly, so two parameters are used to represent the power consumption, that is, 32 digits.

F7.16	Output power correction factor	Factory default	100.0%
	Setting range	0 to 100.0%	

Used to correct the actual output power of the motor.

F7.17	Power display dimension selection	Factory default	1
	Setting range	0 to Power display percentage (%) 1 to Power display kilowatts (kW)	

Used to select the dimension of power display D0.05, 0 is displayed in the ratio of output power to motor power, and 1 is displayed in KW.

F8 group accessibility

F8.00	JOG running frequency	Factory default	2.00Hz
	Setting range	0.00Hz to Maximum frequency F0.10	
F8.01	JOG acceleration time	Factory default	20.0s
	Setting range	0.01s to 6500.0s	
F8.02	JOG deceleration time	Factory default	20.0s
	Setting range	0.01s to 6500.0s	

Define the given frequency and acceleration/deceleration time of the inverter during jog. The jog process starts and stops according to start mode 0 (F1.00, direct start) and stop mode 0 (F1.10, decelerate to stop).

Jog acceleration time refers to the time required for the inverter to accelerate from 0Hz to the maximum output frequency (F0.10).

Jog deceleration time refers to the time required for the inverter to decelerate from the maximum output frequency (F0.10) to 0Hz..

F8.09	Emergency stop deceleration time	Factory default	Model determination
	Setting range	0. 01s to 6500.0s	

The terminal is set to downtime in case of emergency stop.

F8.10	Jump frequency 1	Factory default	0.00Hz
	Setting range	0.00Hz to Maximum frequency	
F8.11	Jump frequency 2	Factory default	0.00Hz
	Setting range	0.00 Hz to Maximum frequency	
F8.12	Jump frequency amplitude	Factory default	0.01Hz
	Setting range	0.00 to Maximum frequency	

When the set frequency is within the jump frequency range, the actual running frequency will run at the jump frequency boundary closer to the set frequency. By setting the jump frequency, the VFD can avoid the mechanical resonance point of the load. The inverter can be configured with two jump frequency points. This function does not work if both jump frequencies are set to 0.

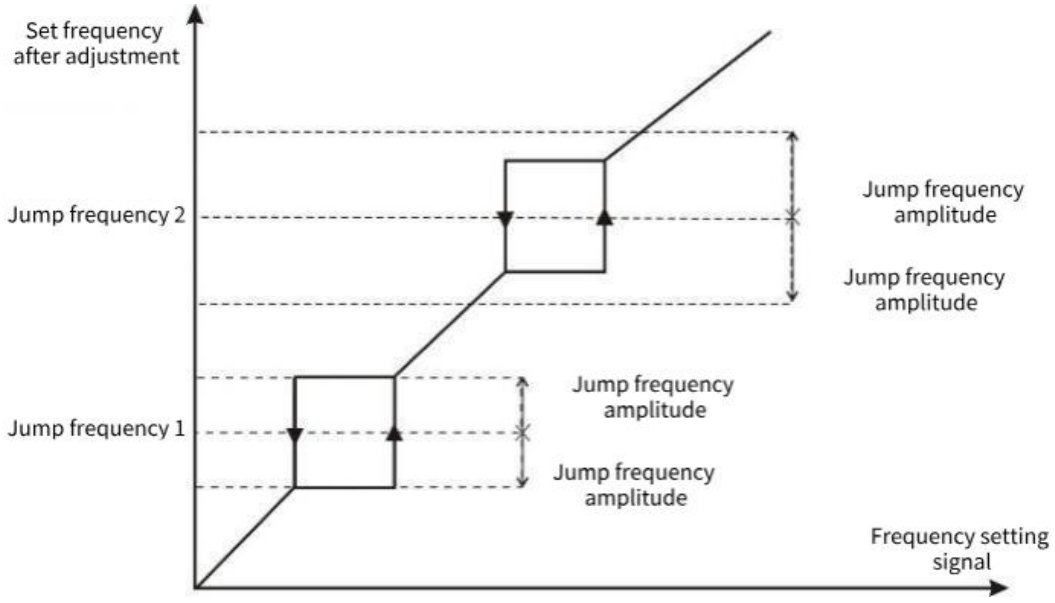

Figure 9-8-1 Jump frequency diagram

F8.13	Reversible dead zone time	Factory default	0.0s
	Setting range	0.0 to 120.0s	

Set the transition time at the output zero frequency during the positive and negative transition of the inverter, as shown below:

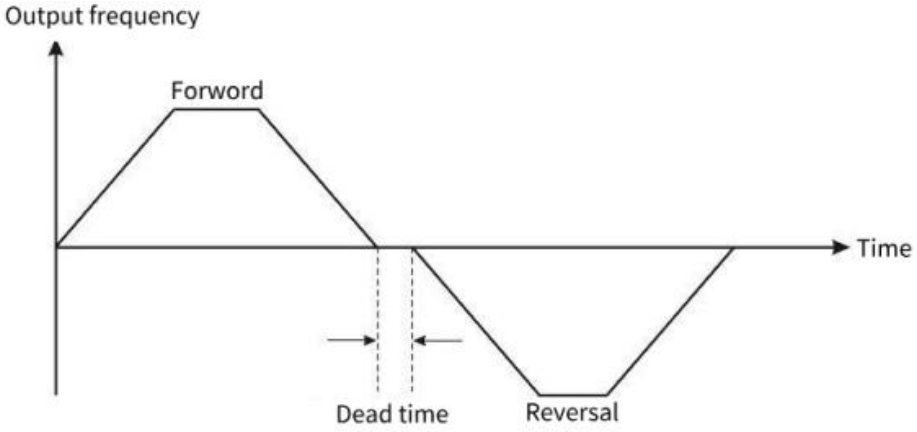

Figure 9-8-2 Reverse rotation dead zone time diagram

F8.14	The carrier frequency is adjusted with temperature	Factory default	1
	Setting range	0: Temperature independent 1:Temperature dependent, >75, 1.0Khz	

Effective carrier frequency temperature adjustment means that the VFD can automatically adjust the carrier frequency according to its own temperature. Select this function to reduce the chances of VFD overheating alarm.

F8.15	Terminal action is preferred	Factory default	1
	Setting range	0: Invalid 1: Valid	

0: When the running command and the point command exist at the same time, the running command takes precedence.

1: If the running command and the point-action command exist at the same time, the point-action command takes precedence.

F8.16	Set the cumulative power-on arrival time	Factory default	0h
	Setting range	0h to 65000h	

Pre-set the power-on time of the inverter. When the cumulative power-on time (F7.13) reaches the set power-on time, set the DO output function, and the inverter multi-function digital DO output running time arrival signal.

F8.17	Set the cumulative run arrival time	Factory default	65000h
	Setting range	0h to 65000h	

Pre-set the running time of the inverter. When the accumulated running time (F7.09) reaches this set running time, set the DO output function, the inverter multi-functional digital DO output running time arrival signal.

F8.20	Arrival time of this run	Factory default	0
	Setting range	0 to 65000min	

Set the current running time, shutdown clear zero.

F8.22	Frequency detection value (FDT1)	Factory default	50.00Hz
	Setting range	0.00Hz to Maximum frequency	
F8.23	Frequency Detection Lag value (FDT1)	Factory default	5.0%
	Setting range	0.0% to 100.0%(FDT1 Electric level)	
F8.24	Frequency detection value (FDT2)	Factory default	50.00Hz
	Setting range	0.00Hz to Maximum frequency	
F8.25	Frequency detection lag value (FDT2)	Factory default	0.0%
	Setting range	0.0% to Maximum frequency	

Set the detection value of the output frequency and the lag value of the output action release.

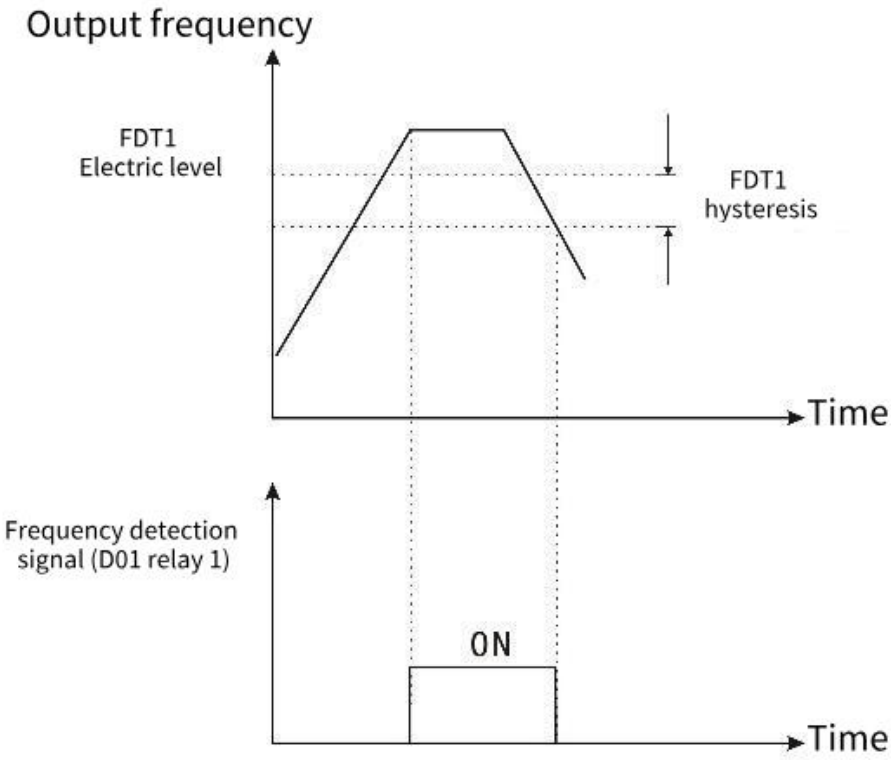

Figure 9-8-3 Schematic diagram of FDT1 level

F8.26	Frequency reaches the detection width	Factory default	0.0%
	Setting range	0.00 to 100% Maximum frequency	

When the output frequency of the inverter reaches the set frequency value, this function can adjust its detection amplitude.

As shown below:

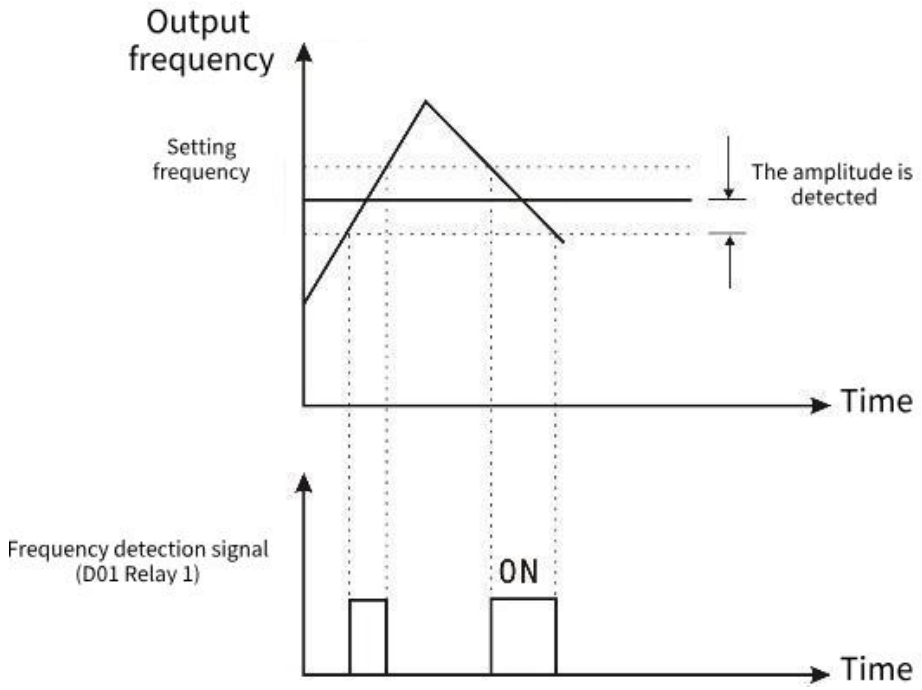

Figure 9-8-4 Schematic diagram of frequency arrival detection amplitude

F8.27	Arbitrary reach frequency detection value 1	Factory default	50.00Hz
	Setting range	0.00Hz to Maximum frequency	
F8.28	Arbitrary arrival frequency detection amplitude 1	Factory default	0.0%
	Setting range	0.0% to 100.0% (Maximum frequency)	
F8.29	Arbitrary reach frequency detection value 2	Factory default	50.00Hz
	Setting range	0.00Hz to Maximum frequency	
F8.30	Arbitrary arrival frequency detection amplitude 2	Factory default	0.0%
	Setting range	0.0% to 100.0% (Maximum frequency)	

When the output frequency of the inverter reaches the positive and negative detection amplitude of the frequency detection value 1 and 2, the output pulse signal.

As shown below:

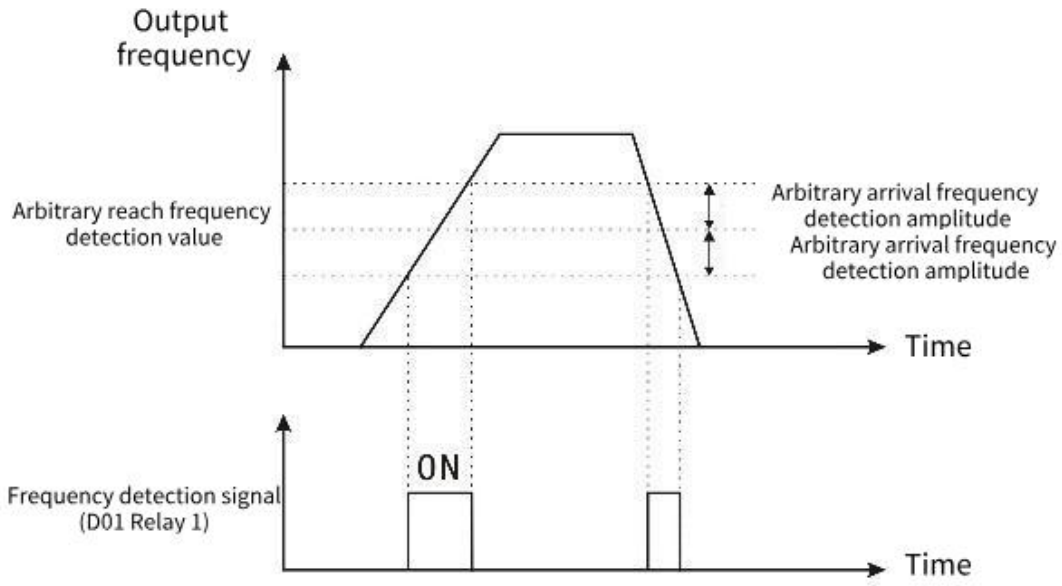

Figure 9-8-5 Schematic diagram of detection of arbitrary arrival frequency

F8.31	Arbitrary arrival current 1	Factory default	100.0%
	Setting range	0.0% to 300.0% (Rated current of motor)	
F8.32	Arbitrary arrival current 1 width	Factory default	0.0%
	Setting range	0.0% to 300.0% (Rated current of motor)	
F8.33	Arbitrary arrival current 2	Factory default	100.0%
	Setting range	0.0% to 300.0% (Rated current of motor)	
F8.34	Arbitrary arrival current 2 width	Factory default	0.0%
	Setting range	0.0% to 300.0%(Rated current of motor)	

When the output current of the inverter reaches any positive or negative detection width of current 1 and 2, output pulse signal.

As shown below:

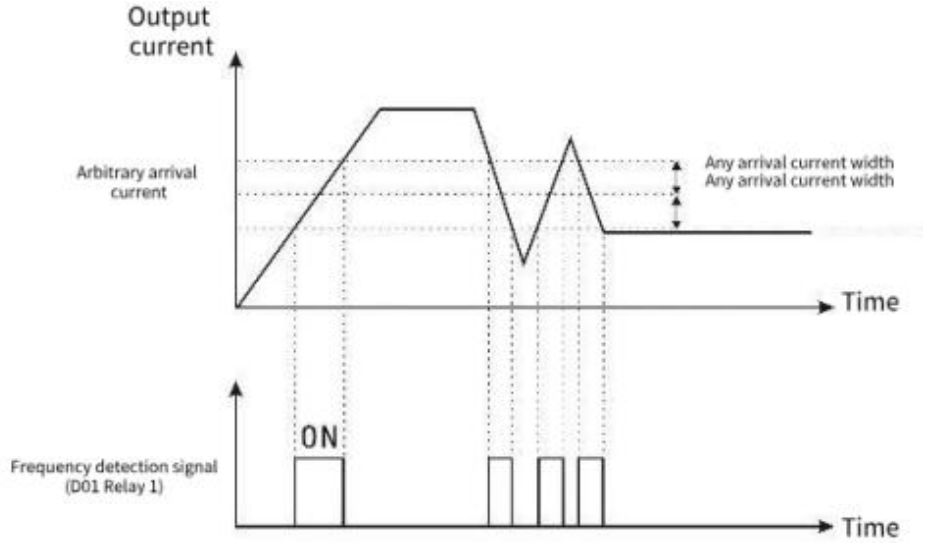

Figure. 9-8-6 Schematic diagram of detection of arbitrary arrival frequency

F8.35	Zero current detection value	Factory default	5.0%
	Setting range	0.0% to 300.0% (Rated current of motor)	
F8.36	Zero current detection delay time	Factory default	0s
	Setting range	0 to 600.00s	

Figure 9-8-7 Schematic diagram of zero current detection

When the output current of the inverter is less than or equal to the zero current detection level and the duration exceeds the zero current detection delay time, the output pulse

Rush the signal. As shown below:

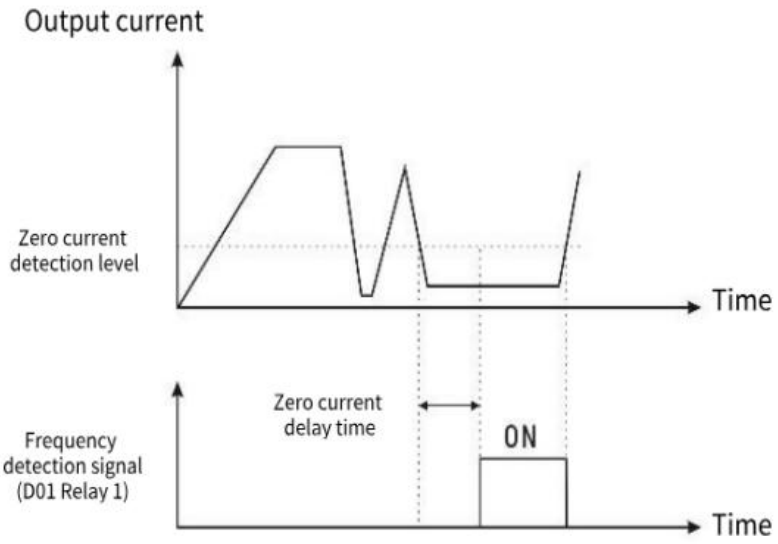

F8.37	Software overflow point (DO output)	Factory default	200.0%
	Setting range	0.0% to 300.0% (Rated current of VFD)	
F8.38	Software over current detection delay time	Factory default	0s
	Setting range	0 to 600.00s	

When the output current of the inverter is greater than or equal to the software over current point and the duration exceeds the software over current point detection delay time, the output pulse Rush the signal. As shown below:

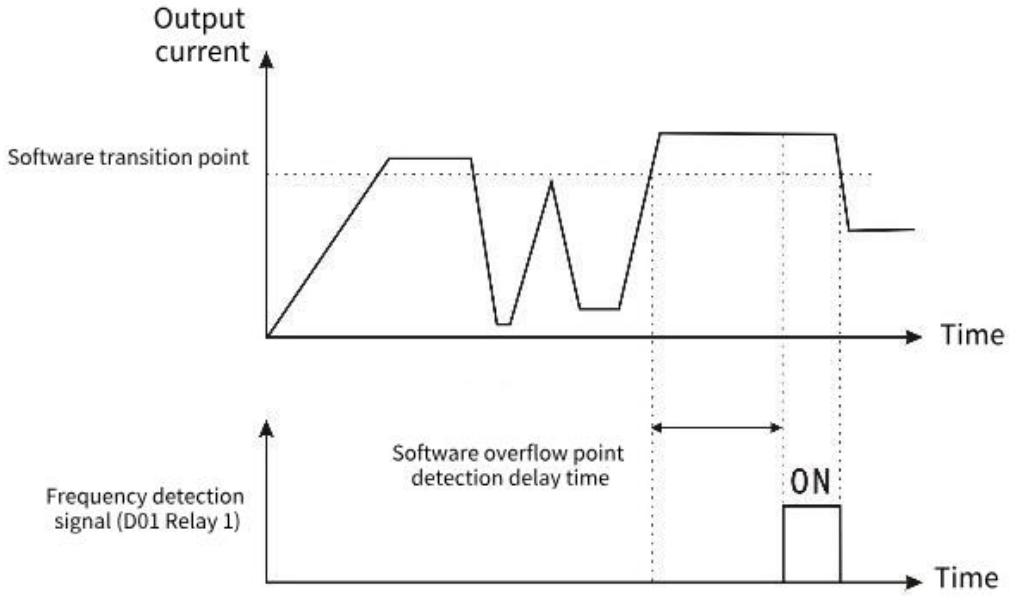

Figure 9-8-8 Schematic diagram of software overflow point detection

F9 group process control PID function

PID control is a common method used for process control. By proportional, integral and differential operations on the difference between the feedback signal of the controlled quantity and the target quantity signal, the output frequency of the inverter is adjusted to form a negative feedback system, so that the controlled quantity is stable on the target quantity. Suitable for flow control, pressure control, temperature control and other process control. The basic control block diagram is as follows:

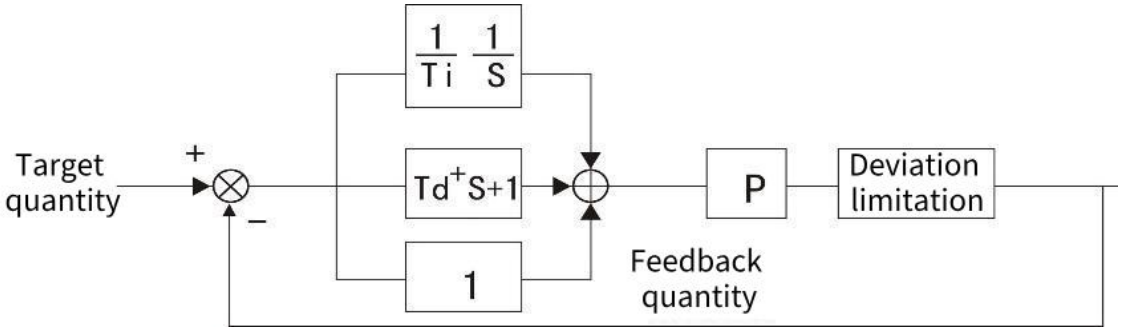

Figure 9-9-1 Process PID schematic diagram

F9.00	PID given source	Factory default	0
	Setting range	0: Keyboard number PID is set to F9.01 1: AI1 2: AI2 3: Reservations 4: Set the terminal PULSE 5: Communication given 6: Multi-speed set 7: Keyboard potentiometer set	

When the frequency source is selected PID, that is, F0.03 or F0.04 is selected 8, this set of functions works. (See function code F0.03-F0.04.) This parameter determines the target amount of the process PID for a given channel. The set target quantity of process PID is relative value, and 100% of the set value corresponds to 100% of the feedback signal of the controlled system. The range of the PID (F9.04) is not required, because the system calculates relative values (0 to 100%) regardless of the range set. However, if the PID range is set, the actual value of the PID given and feedback corresponding to the signal can be visually observed through the keyboard display parameters.

F9.01	PID Value setting	Factory default	50.0%
	Setting range	0.00 to 100.0%	

When F9.00=0 is selected, the target source is the keyboard given. This parameter needs to be set. The reference value of this parameter is the feedback amount of the system.

F9.02	PID feedback source	Factory default	0
	Setting range	0: AI1 1: AI2 2: Reservations 3: AI1 to AI2 4: Set the terminal PULSE 5: Communication given 6: AI1+AI2 7: MAX(|AI1|, |AI2|) 8: MIN(|AI1|, |AI2|) 9: Keyboard potentiometer feedback	

This parameter is used to select the PID feedback channel.

F9.03	PID control characteristic	Factory default	0
	Setting range	LED ones digit: Feedback feature selection 0: Positive action 1: Negative action LED tens place: PID adjustment direction selection 0: Reverse prohibition 1: Reverse enable LED hundreds place: Align selection 0: Non-center alignment 1: Center align LED thousands place: reserved	

Feedback feature selection:

Positive effect: When the feedback signal is less than the given PID, the output frequency of the inverter is required to rise in order to make the PID balance. Such as winding tension PID control.

Reverse effect: When the feedback signal is less than the feed time of the PID, the output frequency of the inverter is required to decrease in order to achieve balance of the PID. Such as unwinding tension PID control.

The effect of this function is negatively affected by the direction of the terminal function 35: PID.

Adjustment direction selection:

Reverse prohibition: When the output frequency is calculated to be negative, the inverter outputs 0Hz.

Reverse allowed: the inverter output changes direction and the motor reverses.

Align selection:

When the PID set point is not at the center point of 50%, the difference between the PID set point and the PID feedback value, that is, the error range, is asymmetrical.

Off-center alignment: Errors are not corrected.

Center alignment: Error correction.

F9.04	PID given feedback range	Factory default	100.0
	Setting range	0 to 100.0	
F9.05	Proportional gain P1	Factory default	20.00
	Setting range	0.00 to 1000.00	
F9.06	Integration time I1	Factory default	2.00s
	Setting range	0.00 to 10.00s	
F9.07	D1derivative time D1	Factory default	0.00s
	Setting range	0.00 to 10.00s	

Proportional gain P1: Determines the adjustment intensity of the entire PID regulator, the greater the P, the greater the adjustment intensity. The parameter 100 indicates that when the deviation between the PID feedback quantity and the feed quantity is 100%, the PID: regulator's adjustment amplitude to the output frequency instruction is Maximum frequency (ignoring the integral and differential effects).

Integration time I1: determines how quickly the PID controller adjusts the amount of PID feedback and the deviation of the given quantity. Integration time refers to when the deviation of PID feedback quantity and feed quantity is 100%, the integration regulator (ignoring proportional action and differential action) is continuously adjusted through the time, and the adjustment amount reaches the Maximum frequency (F0.10). The shorter the integration time, the greater the adjustment intensity.

Differential time D1: Determines the intensity with which the PID regulator adjusts the amount of PID feedback and the rate of change of the given amount of deviation. The differential time means that if the feedback quantity changes 100% in this time, the adjustment amount of the differential regulator is Maximum frequency (F0.10) (ignoring the proportional action and integral action). The longer the differential time, the greater the adjustment intensity.

F9.08	Reverse cut-off frequency	Factory default	0.00Hz
	Setting range	0.00 to Maximum frequency F0.10	
F9.09	PID deviation limit	Factory default	0.0%
	Setting range	0. 0% to 100.0%	

Deviation limit: When the PID feedback deviation is within this range, the PID stops adjusting.

F9.10	PID differential limiting	Factory default	0.10%
	Setting range	0.00% to 100.00%	
F9.11	PID given change time	Factory default	0.00s
	Setting range	0.00s to 100.00s	

The given PID change time refers to the time required for the actual PID value to change from 0.0% to 100.0%.

When the PID set changes, the actual value of the PID set does not follow the immediate response. And according to the given change time linear change, prevent a given mutation.

F9.12	PID feedback filtering time	Factory default	0.00s
	Setting range	0.00s to 60.00s	
F9.13	PID output filtering time	Factory default	0.00s
	Setting range	0.00s to 60.00s	

The PID feedback and output values are filtered to eliminate abrupt changes.

F9.14	Proportional gain P2	Factory default	20.0
	Setting range	0.0 to 100.0	
F9.15	Integration time I2	Factory default	2.00s
	Setting range	0.01s to 10.00s	
F9.16	Differential time D2	Factory default	0.000s
	Setting range	0.00 to 10.000	

The setting is similar to F9.05, F9.06, and F9.07. For details about how to change the PID parameters, see F9.18.

F9.17	PID parameter switching condition	Factory default	0
	Setting range	0: No switching 1: Terminal switch 2: Automatically switch according to deviation	
F9.18	PID parameter switching deviation 1	Factory default	20.0%
	Setting range	0.0% to F9.19	
F9.19	PID parameter switching deviation 2	Factory default	80.0%
	Setting range	F9.18 to 100.0%	

In some applications, a single set of PID parameters may not be sufficient for the entire operation. Multiple groups of PID parameters may need to be switched.

0: No switching, and the PID parameter is constant as parameter group 1.

1: Terminal switch, If the function of the multi-function terminal is set to 43: PID parameter switching terminal and the terminal is valid, select parameter group 2. Otherwise, select parameter group 1.

2: Automatic switching according to the deviation. When the deviation between the given and feedback is less than PID parameter switching deviation 1 (F9.19), F9.05, F9.06 and F9.07 are used as PID adjustment parameters. When the deviation between given and feedback is greater than PID switching deviation 2 (F9.20), F9.15, F9.16 and F9.17 are used as PID adjustment parameters. The PID parameters in the deviation section between switching deviation 1 and switching deviation 2 are linearly switched between the two groups of PID parameters.

F9.20	PID initial frequency value	Factory default	0%
	Setting range	0.0% to 100.0%	
F9.21	PID initial retention time	Factory default	0.0s
	Setting range	0.00s to 6500.0s	

During PID operation, the inverter first sets the output operation with the initial PID value (F9.20) and the duration is F9.21 (PID initial value holding time), and then starts the normal PID adjustment.

F9.23	Feedback wire break action selection	Factory default	0
	Setting range	0: PID continues to run and no fault is reported 1: Stop and report fault (manual reset) 2: Continue PID operation, output alarm signal 3: Run at the current frequency, output alarm signal 4: Stop and report fault (automatic reset)	
F9.24	Wire break alarm upper limit	Factory default	100.0%
	Setting range	F9.25 to 100.0%	
F9.25	Line break alarm lower limit	Factory default	0.0%
	Setting range	0 to F9.24%	
F9.26	Feedback break detection time	Factory default	0.0s
	Setting range	0.0s to 120.0s	

The upper limit (F9.24) duration reaches F9.26 (feedback loss detection time), the inverter reports a fault and runs according to F9.29 setting.

F9.27	PID stop operation	Factory default	0
	Setting range	0: Disable calculation on shutdown 1: Enable calculation on shutdown	
F9.28	PID function selection	Factory default	0
	Setting range	0: Normal PID 1: Sleep PID	

0: The inverter runs with normal PID control, and the sleep function is invalid.

1: The inverter runs with sleep PID control, and the sleep function is enabled.

F9.29	PID sleep threshold	Factory default	60.0%
	Setting range	0.0% to 100.0%	
F9.30	PID sleep delay	Factory default	3.0s
	Setting range	0.0 to 3600.0s	
F9.31	PID wake-up threshold	Factory default	20.0%
	Setting range	0.0% to 100.0%	
F9.32	PID wake up delay	Factory default	3.0s
	Setting range	0.0 to 3600.0s	

When selecting the sleep PID, if the feedback is higher than the sleep threshold set by F9.29 and the running frequency is less than or equal to the sleep frequency set by F9.33, the VFD starts the sleep timing. After the sleep delay time set by F9.30, if the feedback quantity is higher than the set quantity set by F9.29 and the running frequency is less than or equal to the sleep frequency set by F9.33, Then the PID stops running and the inverter enters sleep state. If the feedback is lower than the setting of F9.31 wake-up threshold, the VFD starts the wake-up timing. After the time set by F9.32 wake-up delay, if the feedback is still lower than the setting of F9.31 wake-up threshold, the wake-up is successful and PID control is performed. Refer to Figure 9-9-2 below to understand the above parameter relationships.

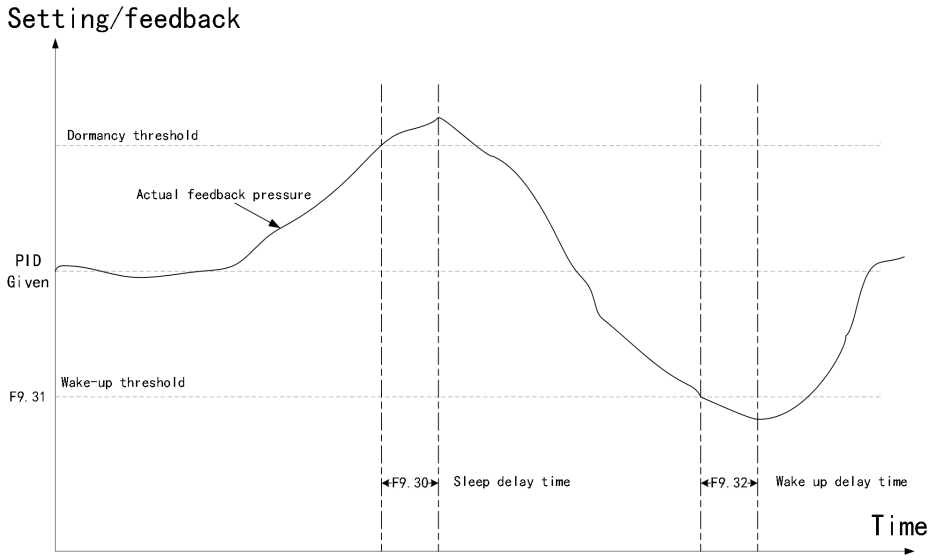

Figure 9-9-2 Schematic diagram of PID sleep and wake time sequence

F9.33	Dormancy detection frequency	Factory default	25.00Hz
	Setting range	0 to Upper limit frequency F0.12	
F9.34	Minimum output	Factory default	0
	Setting range	0: F0.14 (Lower limit frequency) 1: 0Hz	

Sleep detection frequency: Frequency at which the system determines whether the sleep condition is met.

F9.35	Maximum forward deviation of two outputs	Factory default	1.00%.
	Setting range	0.00% to 100.00%	
F9.36	Maximum reverse deviation of two outputs	Factory default	1.00%
	Setting range	0.00% to 100.00%	

This function code is used to limit the difference between the PID output two beats (2ms/ beat), thereby suppress the PID output changes too fast. F9.23 and F9.24 correspond to the maximum output deviation for forward and reverse rotation respectively.

F9.38	PID preset switchover condition selection	Factory default	0
	Setting range	0: Time 1: Switch according to AI1 feedback value	
F9.39	PID AI feedback switching minimum	Factory default	45.0%
	Setting range	0.0 to F9.40	
F9.40	PID AI feedback switching maximum	Factory default	55.0%
	Setting range	F9.39 to 100.0%	

PID preset switching condition selection: Switch from preset output frequency (F9.20) to PID given.

0: Switch according to the running time set by F9.21.

1: Switch when the feedback value is greater than or equal to F9.23 and less than or equal to F9.24.

FA group failure and protection

FA.00	Motor overload protection selection	Factory default	1
	Setting range	0: Off 1: On	

Select 0: The inverter has no overload protection for the load motor, and the relay is heated in front of the motor.

Select 1: At this time, the inverter has overload protection function for the motor. See FA.01 for protection values.

FA.01	Motor overload protection factor	Factory default	100.0%
	Setting range	0.0 to 250.0%	

Motor overload protection is inverse time curve; 220% x (FA.01) x rated motor current for 1 minute, 150% x (FA.01) x rated motor current for 60 minutes.

FA.02	Motor overload warning factor	Factory default	80.0%
	Setting range	20.0 to 250.0%	

The reference for this value is the overload current of the motor. When the inverter detects that the output current reaches (FA.02) x the motor overload current and continues for the specified time in the inverse time curve, the forecast alarm is output from the DO or relay.

FA.03	Over voltage stall/over loss rate control options	Factory default	1111
	Setting range	0: Off 1: On LED units place: The over voltage suppression is enabled Tens place: over current suppression is enabled LED hundreds place: Determine whether the brake resistance is connected LED thousands place: Overflow suppression rapid frequency rise	

LED units place: Over voltage suppression enabled

0: Disable over voltage suppression. 1: Enable overvoltage suppression. When a braking resistor is connected, set this bit to 0.

LED tens place: Enable over current suppression

0: Disable over current suppression. 1: Enable the over current suppression function.

LED hundreds place: Determine brake resistance access

When the over voltage suppression is turned on, it may affect the energy consumption braking

action. This bit is used to automatically determine whether the resistance is connected. When the brake resistance is connected, the over voltage suppression will automatically decrease.

LED thousands place: Overflow suppression rapid frequency rise

This bit is used to set how the frequency increases when over current suppression is withdrawn. When set to 0, the frequency is accelerated according to the acceleration time; When set to 1, the frequency is controlled by the current, so as the current decreases, the frequency will rise rapidly.

FA.04	Over pressure suppression point	Factory default	Model-based setting
	Setting range	110% to 150%	
FA.05	Udc control voltage loop gain	Factory default	2.00
	Setting range	0.00 to 50.00	
FA.06	Udc control current loop gain	Factory default	2.00
	Setting range	0.00 to 50.00	

When the bus voltage exceeds FA.04× rated bus voltage during the operation of the VFD, the VFD will automatically adjust the operating frequency to suppress the bus voltage rise, so as to ensure that the VFD will not cause over voltage protection due to the high bus voltage. FA.05 and FA.06 are the voltage loop gain and current loop gain when the bus voltage is regulated, respectively. Instantaneous stop of the voltage loop and current loop gain is also the reference number.

FA.07	Over current suppression point	Factory default	150%
	Setting range	50% to 200%	
FA.08	Over current suppression gain	Factory default	2.00
	Setting range	0.00 to 50.00	
FA.09	Over current suppression integral	Factory default	4.00
	Setting range	0.00 to 50.00	

When controlling the motor, the motor current increases with the increase of load, and the over current suppression gain function limits the maximum current of the motor. When the current reaches the rated current of FA.07* inverter, the output frequency automatically decreases to limit the motor current not exceeding the current set by FA.07; FA.08 and FA.09 are over current suppression controller parameters. Adjusting these two parameters can improve and optimize the over current suppression effect.

FA.10	Power-on short-circuit detection to the ground	Factory default	1
	Setting range	0: Invalid 1: Valid	

The inverter can be selected to detect whether the motor has a ground protection short circuit fault when it is powered on. If this function is effective, the inverter is output for a short time at the moment of power-on.

FA.11	Input phase loss protection	Factory default	1
	Setting range	0: Off 1: On	

Select whether to protect against input phase loss.

FA.12	Output phase loss protection	Factory default	1
	Setting range	0: Off 1: On	

Select whether to protect output phase loss.

FA.13	Input phase loss protection software detection level	Factory default	15.0%
	Setting range	0.0 to 999.9%	

The input missing phase is judged by calculating the fluctuation of bus voltage. This parameter is used to set the threshold of bus voltage fluctuation when the input phase is out. Turning down can increase the sensitive zero of the input phase out, and turning up can reduce the probability of false positive of the input phase out.

FA.14	PWM Parameter setting	Factory default	0010
	Setting range	LED units place: Turn on voltage prediction compensation LED tens place: PWM update mode 0: Single sample update 1: Double sample and double update LED hundreds place: random carrier mode 0: Random carrier 1: Random 0 vector	

LED units place: Turn on voltage prediction compensation

1: Turn on the bus voltage prediction compensation.

LED tens place: PWM update mode.

0: single sample update. 1: Double sample and double update.

LED hundreds place: random carrier mode.

0: Random PWM carrier frequency. 1: Random 0 vector.

FA.15	Hardware current and voltage protection	Factory default	0011
	Setting range	LED units place: Current limiting (CBC) 0: Off 1: On LED tens place: - LED hundreds place: FAU filtering time 1 to F LED thousandsd place: TZ filtering time 1 to F	

LED units place: Hardware current limiting (CBC).

0: Disable CBC current limiting 1: Enable CBC current limiting

LED tens place: reserved.

LED hundreds place: FAU filtering time.

The FAU signal is the fault signal of the power device. This parameter is used to set the filtering time of the FAU signal.

LED thousands place: TZ filtering time.

The TZ signal is an over current signal. This parameter is used to set the filtering time of the TZ signal.

FA.16	CBC protection point	Factory default	200%
	Setting range	100 to 220%	
FA.17	CBC overload protection time	Factory default	500ms
	Setting range	1 to 5000ms	

When the motor current is higher than the rated current of FA.16*VFD, the per-wave current limiting starts. If the per-wave current limiting duration exceeds the time set in FA.17, the VFD reports Err. This parameter is used to set the per-wave current limiting current and fault response time.

FA.18	Under voltage point setting	Factory default	100.0%
	Setting range	40 to 100%	

Adjusting this parameter can adjust the voltage point of the VFD reporting the under voltage fault (Err09), 100.0% corresponds to 350V.

FA.20	Times of self-recovery	Factory default	0
	Setting range	0 to 5	

When the inverter selects fault automatic reset, it is used to set the number of times that can be automatically reset. If the value exceeds this value, the inverter is faulty and waiting for repair.

FA.21	Interval for fault self-recovery	Factory default	1.0s
	Setting range	0.1 to 100.0ms	

VFD from fault alarm to automatic reset fault waiting time.

FA.22	Instant stop non-stop function selection	Factory default	0000
	Setting range	One place: Power loss ride-through enabled 0: Disabled 1: Enabled Tens place: Power loss ride-through selection 0: Discontinuous running 1: Stop	

Ones place: Power loss ride-through enabled

0: Disable power loss ride-through . 1: Enable power loss ride-through.

Tens place: Power loss ride-through selection

Select the action when the frequency drops to zero during a power loss ride-through.

0: Run at 0 Hz until under-voltage

1: Shut down immediately

FA.23	Power loss ride-through voltage threshold	Factory default	75%
	Setting range	40% to 150%	
FA.24	Power loss ride-through stable voltage	Factory default	95%
	Setting range	60% to 150%	

When the input power is reduced or power off, the inverter can control the motor speed down to feedback energy to avoid the VFD under voltage fault, the function is called power loss ride-through . When the bus voltage is lower than the rated bus voltage *FA.24, The power loss ride-through function is active. and control the motor to feedback energy to stabilize the bus voltage at the rated bus voltage *FA.24.

FB group swing frequency, fixed length and counting

Swing frequency function is suitable for textile, chemical fiber and other industries and need transverse movement, winding function occasions.

The function of swing frequency means that the output frequency of the inverter swings up and down with the set frequency as the center.

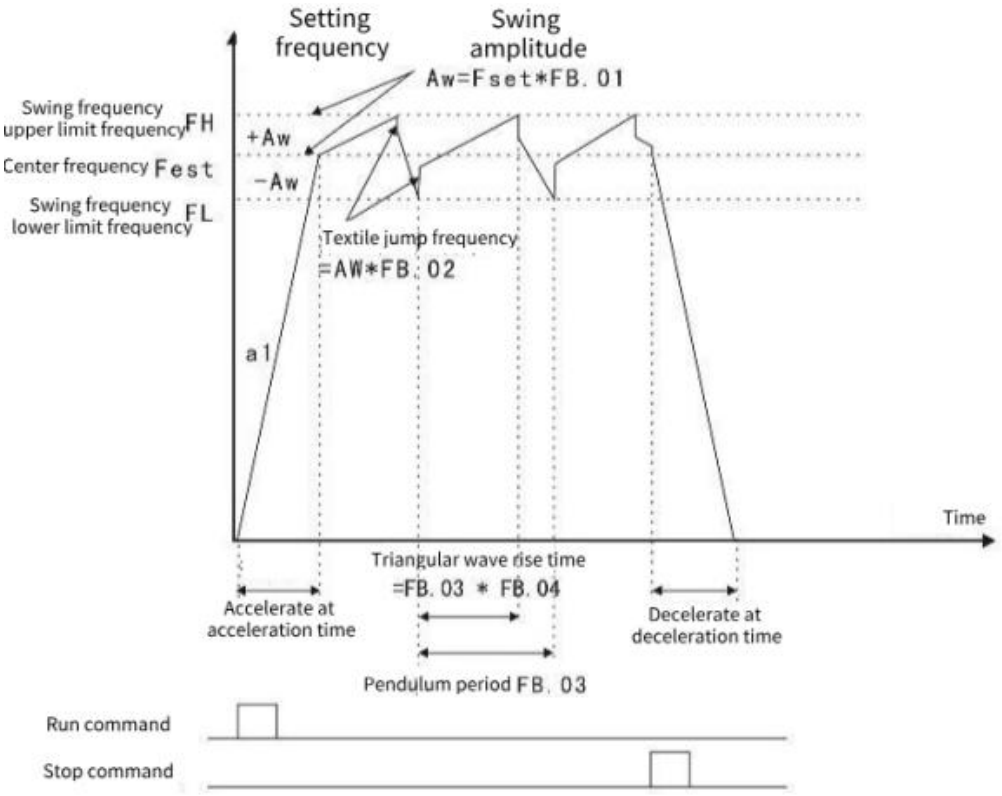

Figure 9-B-1 Schematic diagram of swing frequency operation

FB.00	Swing frequency control	Factory default	0
	Setting range	LED ones diigt: Swing frequency control 0: The swing frequency control is disable 1: Swing frequency control is effective LED tens digit: Swing frequency input mode 0: Automatic input 1: Manual input LED hundreds digit: Swing control 0: Variable amplitude 1: Fixed amplitude LED thousands digit: Reserved	

LED ones digit: Swing frequency control enable
LED tens digit:
0: Automatic input, according to the parameter setting, automatically enter the swing frequency run after the frequency arrives.
1: Manual input, the frequency is controlled according to the DI terminal status control
LED hundreds digit: 0: Variable amplitude, relative center frequency (set frequency), for variable amplitude system. The swing varies with the change of center frequency (set frequency).
1: Fixed amplitude, relative to maximum frequency (F0.10 maximum output frequency), it is a fixed amplitude system.

FB.01	Swing preset frequency	Factory default	0.00Hz
	Setting range	0.00 to Maximum frequency	
FB.02	Preset frequency duration	Factory default	0.00s
	Setting range	0.00 to 650.00s	
FB.03	Swing amplitude	Factory default	0.0%
	Setting range	0.0% to 100.0%	
FB.04	Jump frequency amplitude	Factory default	0.0%
	Setting range	0.0% to 50.0%	

The value of swing amplitude and jump frequency can be determined by this parameter. The operating frequency of swing frequency is constrained by the upper and lower frequency.
Swing relative to the center frequency (variable amplitude, select FB.00=0) : Swing amplitude, AW = frequency source F0.07× swing amplitude FB.01.
Swing relative to Maximum frequency (fixed amplitude, FB.00=1) : Swing amplitude, AW = Maximum frequencyF0.12 x swing amplitude FB.01.
Snap frequency = swing amplitude AW x jump frequency amplitude FB.02. That is, when the swing frequency is running, the value of the snap frequency relative to the swing amplitude.
If the swing is selected relative to the center frequency (variable swing, select FB.00=0), the jog frequency is the change value.
If the swing is selected relative to the Maximum frequency (fixed swing, select FB.00=1), the jog frequency is fixed.

FB.05	Swing frequency rise time	Factory default	5.00s
	Setting range	0.00 to 650.00s	
FB.06	Swing frequency drop time	Factory default	5.00s
	Setting range	0.00 to 650.00s	

Triangle wave rise time = swing frequency duration FB.02× delta wave rise time coefficient FB.05 (unit: s).
Triangle wave fall time = swing frequency duration FB.02× (1- triangle wave rise time coefficient FB.06) (unit: s).

FC group communication parameters

FC.00	Local address	Factory default	1
	Setting range	1 to 247, 0 is the broadcast address	

When the local address is set to 0, it is the broadcast address, and the host computer broadcast function is realized. The local address is unique (except the broadcast address), which is the basis of point-to-point communication between the host computer and the inverter.

FC.01	Baud rate	Factory default	5
	Setting range	0: 300 bps 1: 600 bps 2: 1200 bps 3: 2400 bps 4: 4800 bps 5: 9600 bps 6: 19200 bps 7: 38400 bps 8: 57600 bps 9: 115200 bps	

This parameter is used to set the data transmission rate between the host computer and the VFD. Note that the baud rate set by the upper computer and the VFD must be consistent, otherwise, communication cannot be carried out. The higher the baud rate, the faster the communication speed.

FC.02	Modbus data format	Factory default	3
	Setting range	0: (8.N.2) 8 bits, no parity, 2 stop bits 1: (8.E.1) 8 bits, even parity, 1 stop bit 2: (8.O.1) 8 bits, odd parity, 1 stop bit 3: (8.n.1) 8 bits, no parity, 1 stop bit	

The data format set by the upper computer and the inverter must be consistent, otherwise, the communication cannot be carried out.

FC.03	Modbus Communication response delay	Factory default	2ms
	Setting range	0 to 20ms	

Response delay: the intermediate interval between the end of the VFD data acceptance and the sending of data to the upper machine. If the response delay is less than the system processing time, the response delay is based on the system processing time. If the response delay is longer than the

system processing time, the system will wait until the response delay time reaches the upper computer before sending the data.

FC.04	Modbus Communication timeout time	Factory default	0.0s
	Setting range	0.0 s(Invalid), 0.1 to 60.0s	

When the function code is set to 0.0s, the communication timeout parameter is invalid.

When this function code is set to valid value, if the interval between one communication and the next communication exceeds the communication timeout period, the system reports a communication fault error (Err16). Usually, this is set to invalid. If you set the next parameter in a continuous communication system, you can monitor the communication status.

FD group multi-speed function and simple PLC function

Simple PLC function is the inverter built-in a programmable controller (PLC) to complete the automatic control of multi-segment frequency logic. Operation time, operation direction and operation frequency can be set to meet the requirements of the process. This series of inverter can realize 16 speed change control, there are 4 kinds of acceleration and deceleration time to choose. When the set PLC completes a cycle, an ON signal can be output by the multifunctional digital output terminal DO1, DO2 or the multifunctional relay relay 1, relay 2. See F1.02 to F1.05 for details. When the frequency source F0.07, F0.03, F0.04 is selected to determine the multi-speed operation mode, FD.00 to FD.15 needs to be set to determine its characteristics.

FD.00	Multi-segment speed instruction 0	Factory default	0
	Setting range	-100.0% to 100.0% (100.0% refers to Maximum frequency F0.10)	
FD.01	Multi-segment speed instruction 1	Factory default	0
	Setting range	-100.0% to 100.0%	
FD.02	Multi-segment speed instruction 2	Factory default	0
	Setting range	-100.0% to 100.0%	
FD.03	Multi-segment speed instruction 3	Factory default	0
	Setting range	-100.0% to 100.0%	
FD.04	Multi-segment speed instruction 4	Factory default	0
	Setting range	-100.0% to 100.0%	
FD.05	Multi-segment speed instruction 5	Factory default	0
	Setting range	-100.0% to 100.0%	
FD.06	Multi-segment speed instruction 6	Factory default	0
	Setting range	-100.0% to 100.0%	
FD.07	Multi-segment speed instruction 7	Factory default	0
	Setting range	-100.0% to 100.0%	
FD.08	Multi-segment speed instruction 8	Factory default	0
	Setting range	-100.0% to 100.0%	
FD.09	Multi-segment speed instruction 9	Factory default	0
	Setting range	-100.0% to 100.0%	
FD.10	Multi-segment speed instruction 10	Factory default	0
	Setting range	-100.0% to 100.0%	
FD.11	Multi-segment speed instruction 11	Factory default	0
	Setting range	-100.0% to 100.0%	
FD.12	Multi-segment speed instruction 12	Factory default	0
	Setting range	-100.0% to 100.0%	
FD.13	Multi-segment speed instruction 13	Factory default	0
	Setting range	-100.0% to 100.0%	

FD.14	Multi-segment speed instruction 14	Factory default	0
	Setting range	-100.0% to 100.0%	
FD.15	Multi-segment speed instruction 15	Factory default	0
	Setting range	-100.0% to 100.0%	

When the frequency source parameters F0.07, F0.03 and F0.04 are determined as the PLC operating mode, FD.00 to FD.15, FD.16, FD.17, FD.18 to FD.49 need to be set to determine their characteristics.

Instructions: The symbol determines the simple PLC running direction. If the value is negative, it indicates the opposite direction.

FD.16	PLC mode of operation	Factory default	0
	Setting range	0: Stop after a single run 1: Maintain the final value at the end of a single run 2: Keep cycling	

0: Stops after a single run

The inverter automatically stops after completing a single cycle and needs to give the running command again to start.

1: Maintain the final value at the end of a single run

The VFD automatically maintains the operating frequency and direction of the last section after completing a single cycle.

2: Keep cycling

After the inverter completes a cycle, it automatically starts the next cycle until the system stops when there is a stop command.

FD.17	PLC power down memory selection	Factory default	00
	Setting range	Ones place: 0: Non-retentive on power down 1: Retentive on power down Tens place: 0: Non-retentive on shutdown 1: Retentive on shutdown	

Ones place: Power down retension selection

PLC power down retension: The operating stage and operating frequency of PLC before power down.

Tens place: Shutdown retention selection

PLC shutdown retention: Record the operating stage and operating frequency of the previous PLC during shutdown.

FD.18	PLC stage 0 operation time	Factory default	0.0s(h)
	Setting range	0.0s(h) to 6553.5s(h)	
FD.19	PLC phase 0 acceleration and deceleration time selection	Factory default	0
	Setting range	0 to 3	
FD.20	PLC stage 1 operation time	Factory default	0.0s(h)
	Setting range	0.0s(h) to 6553.5s(h)	
FD.21	PLC phase 1 acceleration and deceleration time selection	Factory default	0
	Setting range	0 to 3	
FD.22	PLC stage 2 operation time	Factory default	0.0s(h)
	Setting range	0.0s(h) to 6553.5s(h)	
FD.23	PLC phase 2 acceleration and deceleration time selection	Factory default	0
	Setting range	0 to 3	
FD.24	PLC stage 3 operation time	Factory default	0.0s(h)
	Setting range	0.0s(h) to 6553.5s(h)	
FD.25	PLC phase 3 acceleration and deceleration time selection	Factory default	0
	Setting range	0 to 3	
FD.26	PLC stage 4 operation time	Factory default	0.0s(h)
	Setting range	0.0s(h) to 6553.5s(h)	
FD.27	PLC phase 4 acceleration and deceleration time selection	Factory default	0
	Setting range	0 to 3	
FD.28	PLC stage 5 operation time	Factory default	0.0s(h)
	Setting range	0.0s(h) to 6553.5s(h)	
FD.29	PLC phase 5 acceleration and deceleration time selection	Factory default	0
	Setting range	0 to 3	
FD.30	PLC stage 6 operation time	Factory default	0.0s(h)
	Setting range	0.0s(h) to 6553.5s(h)	
FD.31	PLC phase 6 acceleration and deceleration time selection	Factory default	0
	Setting range	0 to 3	
FD.32	PLC stage 7 operation time	Factory default	0.0s(h)
	Setting range	0.0s(h) to 6553.5s(h)	
FD.33	PLC phase 7 acceleration and deceleration time selection	Factory default	0
	Setting range	0 to 3	

FD.34	PLC stage 8 operation time	Factory default	0.0s(h)
	Setting range	0.0s(h) to 6553.5s(h)	
FD.35	PLC phase 8 acceleration and deceleration time selection	Factory default	0
	Setting range	0 to 3	
FD.36	PLC stage 9 operation time	Factory default	0.0s(h)
	Setting range	0.0s(h) to 6553.5s(h)	
FD.37	PLC phase 9 acceleration and deceleration time selection	Factory default	0
	Setting range	0 to 3	
FD.38	PLC stage 10 operation time	Factory default	0.0s(h)
	Setting range	0.0 s(h) to 6553.5s(h)	
FD.39	PLC phase 10 acceleration and deceleration time selection	Factory default	0
	Setting range	0 to 3	
FD.40	PLC stage 11 operation time	Factory default	0.0s(h)
	Setting range	0.0s(h) to 6553.5s(h)	
FD.41	PLC phase 11 acceleration and deceleration time selection	Factory default	0
	Setting range	0 to 3	
FD.42	PLC stage 12 operation time	Factory default	0.0s(h)
	Setting range	0.0s(h) to 6553.5s(h)	
FD.43	PLC phase 12 acceleration and deceleration time selection	Factory default	0
	Setting range	0 to 3	
FD.44	PLC stage 13 operation time	Factory default	0.0s(h)
	Setting range	0.0s(h) to 6553.5s(h)	
FD.45	PLC phase 13 acceleration and deceleration time selection	Factory default	0
	Setting range	0 to 3	
FD.46	PLC stage 14 operation time	Factory default	0.0s(h)
	Setting range	0.0s(h) to 6553.5s(h)	
FD.47	PLC phase 14 acceleration and deceleration time selection	Factory default	0
	Setting range	0 to 3	
FD.48	PLC stage 15 operation time	Factory default	0.0s(h)
	Setting range	0.0s(h) to 6553.5s(h)	
FD.49	PLC phase 15 acceleration and deceleration time selection	Factory default	0
	Setting range	0 to 3	

FD.50	PLC operating time unit	Factory default	0
	Setting range	LED units: Timing unit 0: s (seconds) 1: h (hours) 2: min(minutes)	
FD.51	Multi-segment speed instruction 0 given mode	Factory default	0
	Setting range	0: Function code FD.00 given 1: AI1 2: AI2 3: AI3 4: Set the terminal PULSE 5: PID 6: Preset frequency (F0.08) given, UP/DOWN can be modified 7: keyboard potentiometer set	

This parameter determines the target amount of the multi-segment speed 0 given channel.

FD.50: PLC operating time unit.

FD.52	Multiple speed is preferred	Factory default	1
	Set range	0: Invalid 1: Valid	

Set this parameter to 1, F0.03 set the main frequency source not to multi-segment speed, and set F5 group terminal parameter multi-segment speed function,, when the terminal is valid, the frequency source switches to the multi-segment speed set, the multi-segment speed priority has nothing to do with the multi-segment speed 0.

FE group user password

FE.00	User password	Factory default	0
	Setting range	0 to 65535	

If the value is set to any non-zero number, the password protection function takes effect. 00000: clears the previously set password value and invalidates the password protection function. After the user password is set and takes effect, if you enter the parameter setting state again and the user password is incorrect, you can only view the parameters but cannot modify them. Remember the user password you set. If you accidentally set or forget, please contact the manufacturer.

FE.01	Number of times to display fault records	Factory default	4
	Setting range	0 to 8	

This function code is used to set the number of times that fault records are displayed.

FE.02	Parameter and key lock selection	Factory default	0
	Setting range	0: Not locked 1: The function parameter is locked 2: Function parameters and key lock (Except RUN/STOP/JOG) 3: All function parameters and keys are locked	

This function code is used to lock a parameter. After the parameter is locked, it cannot be modified.

A0 displays the parameter group

A0.00	Application macro	Factory default	0
	Setting range	0: Default macro 1: Tile press macro 2: Spring mechanical macro 3: Woodworking machinery macro	

User macro parameter setting.

Chapter 10 Daily care and maintenance

10.1 Routine check items

The ambient temperature, humidity, dust, and vibration may cause aging of the components inside the device, which may lead to potential faults or reduce the service life of the device. Therefore, it is very necessary to implement daily and regular maintenance and maintenance of the equipment, especially for high temperature environments, frequent start-stop occasions, AC power supply and load fluctuations, large vibration or shock environments, dust/metal dust/hydrochloric acid corrosive environments should shorten the periodic inspection interval.

In order to ensure the normal function of the equipment and protect the product from damage, please confirm the following items daily. Please copy the checklist for use. After each confirmation, you need to sign or stamp on the confirmation box.

Check item	Check content	Failure countermeasure	Confirmation field
Motor	Whether the motor has abnormal sound and vibration phenomenon.	Confirm whether the mechanical connection is abnormal; Confirm whether the motor is out of phase; Confirm whether the motor fixing screw is firm; Verify that the motor is grounded.	
Fan cooling	Whether the cooling fan of the inverter and the motor is in abnormal use.	Check whether the cooling fan on the device side is running. Confirm whether the motor side cooling fan is abnormal; Confirm whether the ventilation channel is blocked; Check whether the ambient temperature is within the allowable range	
Installation environment	The electrical cabinet and cable trough are abnormal.	Check whether the cables that enter and exit the device are insulated	
Load	Whether the rated current of AC driver and the motor is over limit.	Ensure the motor setting is correct ; Ensure whether the motor is over load ; Ensure whether the mechanical vibration is too large (Normal < 0.6g)	
Input voltage	Whether the power supply voltage	Ensure the input voltage is in the limited range	

Check item	Check content	Failure countermeasure	Confirmation field
	between the main circuit and the control circuit is abnormal.	Ensure whether there has the large load starting around	

Table 10-1-1 Routine maintenance checklist

10.2 Check list

These follows are the items of the daily check, please check all the items every quarters in general. However, in the actual maintenance, please determine the actual maintenance cycle based on the use of the product and the working environment. Please confirm the following items regularly. Please copy the check list for use. After confirmation, you need to sign or stamp on the check box.

Check item	Check content	Failure countermeasure	Confirmation field
Complete machine	Whether there is garbage, dirt, dust accumulation on the surface.	Check whether the controller cabinet is powered off; Remove garbage or dust with a vacuum cleaner so as not to touch the parts; When the surface dirt can not be removed, you can use alcohol to wipe and dry until volatilized completely;	
Cable	Whether the power line and connection are discolored; Whether the insulation is aged or cracked.	Replace a cracked cable. Replace the damaged connection terminal.	
Electromagnetic contactor periphery	Whether the suction is not tight or makes an abnormal sound during the action; Whether there is short circuit, water contamination, expansion, ruptured peripheral devices.	Replace faulty components	
Air duct vent	Whether the air duct and heat sink are blocked; Whether the fan is damaged.	Cleaning fan; Replace the fan	

Check item	Check content	Failure countermeasure	Confirmation field
Control loop	Whether the control components have poor contact; Whether the terminal screw is loose; Check whether the insulation of the control cable is cracked.	Clean foreign bodies on the surface of the control circuit and connecting terminals; Replace the damaged and corroded control cable	

Table 10-2-1 Regular maintenance checklist

10.3 Replacement of wearing parts

VC wearing parts mainly have cooling fans, and its life is closely related to the use of the environment and maintenance status. The following table describes the general cleaning and maintenance cycles.

Device name	Cleaning and maintenance cycle
Cooling fan	≤30 days
✎**Note:** Users can determine the cleaning and maintenance period of the cooling fan by the operating time and ambient temperature. (The recommended cleaning and maintenance period is 30 days/time) According to the following aspects to determine whether the cooling fan needs to be cleaned and maintained: (1)Remove the cover to check whether there has the dust inside the fan, and clean it before installing it. (2) Remove the cover to check whether the fan blade is far away from the leaf mandrel according to inertia, and gently press it inward to smooth it to ensure that it returns to the original position. According to the following aspects to determine whether the cooling fan needs to be replaced: (1) Possible causes of fan damage: bearing wear, blade aging. (2) Judging criteria for fan damage: whether there are cracks in the fan blades, whether there is abnormal vibration sound during startup, and whether the wind blades are running abnormally. (3) Fan replacement method: Press the buckle of the plastic protective cover of the fan and pull it out. After replacing the fan, ensure that the wind direction blows upward.	

Table 10-3-1 Wear parts maintenance table

Chapter 11 Selection guidance

11.1 Power terminal cable diameter recommended

<table>
<tr><th colspan="6">Main loop terminals</th></tr>
<tr><th rowspan="2">Product model</th><th rowspan="2">Type</th><th colspan="2">Recommended wiring specifications (AWG/mil)</th><th colspan="2">Recommended wiring specifications Cross-sectional area (mm²)</th><th rowspan="2">Recommended mounting torque</th></tr>
<tr><th>Input</th><th>Output</th><th>Input</th><th>Output</th></tr>
<tr><td>VC-2SR75B</td><td rowspan="15">Main loop terminal</td><td colspan="2">16</td><td>0.75</td><td>3x0.75</td><td rowspan="10">13 lbf·in</td></tr>
<tr><td>VC-2S1R5B</td><td colspan="2">14</td><td>1.5</td><td>3x1.5</td></tr>
<tr><td>VC-2S2R2B</td><td colspan="2">14</td><td>2.5</td><td>3x1.5</td></tr>
<tr><td>VC-4TR75B</td><td colspan="2">16</td><td colspan="2">3x0.75</td></tr>
<tr><td>VC-4T1R5B</td><td colspan="2">14</td><td colspan="2">3x0.75</td></tr>
<tr><td>VC-4T2R2B</td><td colspan="2">14</td><td colspan="2">3x0.75</td></tr>
<tr><td>VC-4T004B</td><td colspan="2">14</td><td colspan="2">3x1.5</td></tr>
<tr><td>VC-4T5R5B</td><td colspan="2">10</td><td colspan="2">3x2.5</td></tr>
<tr><td>VC-4T7R5B</td><td colspan="2">10</td><td colspan="2">3x2.5</td></tr>
<tr><td>VC-4T011B</td><td colspan="2">8</td><td colspan="2">3x6</td><td rowspan="2">18 lbf·in</td></tr>
<tr><td>VC-4T015B</td><td colspan="2">8</td><td colspan="2">3x6</td></tr>
<tr><td>VC-4T018R5B</td><td colspan="2">6</td><td colspan="2">3x10</td><td rowspan="2">20 lbf·in</td></tr>
<tr><td>VC-4T022B</td><td colspan="2">6</td><td colspan="2">3x10</td></tr>
<tr><td>VC-4T030B</td><td colspan="2" rowspan="2">5</td><td colspan="2">3x16</td><td rowspan="2">30 lbf·in</td></tr>
<tr><td>VC-4T037B</td><td colspan="2">3x16</td></tr>
<tr><th colspan="6">Control loop terminals</th></tr>
<tr><th>Product power</th><th>Type</th><th colspan="2">Recommended wiring specifications (AWG/mil)</th><th colspan="2">Recommended wiring specifications Cross-sectional area (mm²)</th><th>Recommended mounting torque</th></tr>
<tr><td>0.75kW</td><td rowspan="9">Control loop terminals</td><td colspan="2" rowspan="9"></td><td colspan="2" rowspan="9">0.5</td><td rowspan="9">5 lbf·in</td></tr>
<tr><td>1.5kW</td></tr>
<tr><td>2.2kW</td></tr>
<tr><td>4kW</td></tr>
<tr><td>5.5kW</td></tr>
<tr><td>7.5kW</td></tr>
<tr><td>11kW</td></tr>
<tr><td>15kW</td></tr>
</table>

Main loop terminals						
Product model	Type	Recommended wiring specifications (AWG/mil)		Recommended wiring specifications Cross-sectional area (mm²)		Recommended mounting torque
		Input	Output	Input	Output	
18.5kW						
22kW						
30kW						
37kW						

Table 11-2-1 Power terminal line diameter selection

11.2 Grounding wire selection

The terminals must be grounded correctly, and the resistance of the ground cable must be less than 0.1Ω , unless the equipment might be broken.

Do not share the ground terminal with the neutral N terminal of the power supply.

The impedance of the protective grounding conductor must meet the requirements of being able to withstand the large short-circuit current that may occur in the event of a fault.

Yellow and green cables must be used as grounding conductors.

Select the size of the protective grounding conductor according to the following table.

The cross-sectional area of a phase line (S)	The minimum cross-sectional area of the protective conductor (Sp)
$S \leq 16mm^2$	S
$16mm2 < S \leq 35mm^2$	$16mm^2$
$S > 35mm^2$	S/2

Table 11-2-2 Protective conductor selection

The recommended grounding diameter is the same as the recommended diameter of the main loop terminal of the power segment model.

11.3 Reactor selection recommendation

Recommended brand: EAGTOP

Product model	Power range (380V)	AC output reactor selection	
		Recommended reactor model	Inductance value
VC Series AC Driver	0.75kW	OCL-0005-EISC-E1M4C	1.4mH
	1.5kW	OCL-0005-EISC-E1M4C	1.4mH
	2.2kW	OCL-0007-EISC-E1M0C	1.0mH
	4.0kW	OCL-0010-EISC-EM70C	0.7mH
	5.5kW	OCL-0015-EISC-EM47C	0.47mH
	7.5kW	OCL-0020-EISC-EM35C	0.35mH
	11kW	OCL-0030-EISCL-EM23C	0.23mH
	15kW	OCL-0040-EISCL-EM18C	0.18mH
	18.5kW	OCL-0050-EISCL-EM14C	0.14mH
	22kW	OCL-0060-EISCL-EM12C	0.12mH
	30kW	OCL-0080-EISC-E87UC	0.09mH
	37kW	OCL-0090-EISC-E78UC	0.08mH

Table 11-2-3 Reactor selective type

11.4 Recommended selection of external brake resistance

0.75kW-37kW: VC default support barking unit so just install braking resistor. Please set FA.03=1110.

45kW and above：VC does not support the default barking unit, so need to install external brake unit and brake resistor. Please set FA.03=1110.

Woodworking engraving machine, lifting, centrifugal drying and other industries belong to the high-frequency braking occasions recommended to use higher power braking resistors.

Product Model	Power	Braking unit	Recommended brake resistance specifications (External addition)	Braking resistance quantity	Minimum braking resistance
	Single phase				
VC series AC driver	0.75kW	Built-in standard	80W 150Ω	1	64Ω
	1.5kW		100W 100Ω	1	32Ω
	2.2kW		100W 70Ω	1	32Ω
	Three phase				
	0.75kW	Built-in standard	140W 800Ω	1	96Ω
	1.5kW		300W 380Ω	1	96Ω
	2.2kW		440W 260Ω	1	96Ω
	4.0kW		740W 150Ω	1	32Ω
	5.5kW		1100W 100Ω	1	32Ω
	7.5kW		1500W 75Ω	1	32Ω
	11kW		2200W 50Ω	1	24Ω
	15kW		3000W 38Ω	1	24Ω
	18.5kW		4000W 32Ω	1	24Ω
	22kW		4500W 27Ω	1	24Ω
	30kW		6000W 20Ω	1	19.2Ω
	37kW		7000W 16Ω	1	14.8Ω

Warranty description

Thank you for using our products, in order to ensure that you enjoy the quality of the products purchased in our company, please read the following terms:

1.1 Standard warranty period

The company's VC series universal inverter provides a standard warranty period of twelve months from the date of delivery (based on the shipping information of the body bar code).

1.2 Warranty coverage

During the warranty period, the product fails under the normal requirements of use, with the warranty card, the company will provide you with free product maintenance.

1.3 Out of warranty

1. Machine damage caused by improper product maintenance, on-site accidents, natural disasters, etc.;
2. Damage to the machine caused by disassembly or reassembly of the product without permission;
3. The serial number is changed, removed or incorrect;
4. The buyer does not use the machine properly according to the instructions, or the machine is damaged by human factors.

1.4 Service after warranty expires

If the product has exceeded the warranty period, the company will charge the end user for the field service fee, parts fee, labor fee and logistics fee. Please refer to the following table for detailed standards:

Service content	Sent back to factory for repair	Field maintenance
Need replacement parts	Round-trip logistics fee + labor fee + spare parts fee	Round-trip travel + labor + spare parts
No replacement parts required	Round-trip logistics fee + labor costs	Round-trip travel + labor costs

Travel expenses: round-trip travel expenses for on-site technicians (including bus fare, accommodation, working meals, etc.);

Spare parts: the cost of replacement parts (including any shipping/administration fees);

Labor cost: labor cost of technical personnel, including repair, maintenance, installation and commissioning;

Logistics costs: logistics costs of faulty products shipped from the customer to the Company and repair/replacement products shipped from the Company to the customer, including other derivative costs.